

TBC552L

COLD CUT

Extra Large Cutter

- Cuts up to 8.25" (210mm) wide material or multiple rolls
- Cut up to 105 ft (32m) per min., 21" (43cm) per sec



TBC553L

COLD CUT

Extra Large Cutter

- Cuts up to 12.20" (310mm) wide material or multiple rolls
- Cut up to 105 ft (32m) per min., 21" (43cm) per sec

» For larger widths, refer to TBC554L & TBC555L on chart below.

zcM1500W

Electric Light-Duty Non-Adhesive Cutter



- Ideal for low production of repetitive cutting of non-adhesive materials such as heat-shrink tubing
- Program a defined length and automatically advance and cut material
- Accepts widths up to 2" (51mm)
- Cuts material lengths from .79" to 39" (20 to 999mm)

zcM2500

Electric Light-Duty Non-Adhesive Cutter with Safety Guard Cutter



- Ideal for low production of repetitive cutting of non-adhesive materials such as heat-shrink tubing
- Safety guard system prevents activation of cutter when foreign objects are present (fingers, tools, etc.)
- Accepts widths up to 2" (51mm)
- Cuts material lengths from 1.2" to 39" (30 to 999mm)

Additional info for
zcM1500W & **zcM2500**

- Photocell-actuated feed & cut or push-button feed & cut
- Guillotined cut for a straight edge
- LED Digital length adjustment
- Manual override of preset lengths
- Blades good for up to 200,000 cuts (dependent on type of material)
- Steel frame for durability
- Cabinet made from flame-retardant antistatic composite (auto ignition of 896° F/ 480°C)
- Comes with a 3-in-1 core (1" (25mm), 1.4" (35mm), 3" (76mm))
- Accuracy of cut length is +/– .04" (1mm) (dependent on type of material)
- Many available accessories fit this machine. See Accessories section.
- All 230V machines are CE Certified

Some machines in this catalog have changed to a blue color. Therefore, you may receive a different color than displayed in the photographs.

MODEL #	Max. Width	Max. Material Thickness* Cut Length	Feed Speed	Accuracy*	Max. Outside Dia. of Roll	Length and Count Settings	Feed and Cut	Dimensions	Weight
TBC552L	8.25" (210mm)	.04" to 984' (1mm to 300m)	0.71" (18mm)	105' (32m) / min. 21" (53cm) / sec.	±0.04" (1mm)	18" (457mm)	digital	automatic	31"(L) x 22"(W) x 44"(H) 790mm(L) x 550mm(W) x 1115mm(H)	221 lbs (100 kgs)
TBC553L	12.20" (310mm)	.04" to 984' (1mm to 300m)	0.71" (18mm)	105' (32m) / min. 21" (53cm) / sec.	±0.04" (1mm)	18" (457mm)	digital	automatic	31"(L) x 22"(W) x 44"(H) 790mm(L) x 550mm(W) x 1115mm(H)	228 lbs (103 kgs)
TBC554L	16.14" (410mm)	.04" to 984' (1mm to 300m)	0.71" (18mm)	105' (32m) / min. 21" (53cm) / sec.	±0.04" (1mm)	18" (457mm)	digital	automatic	42"(L) x 31"(W) x 52"(H) 1050mm(L) x 770mm(W) x 1320mm(H)	267 lbs (121 kgs)
TBC555L	20.08" (510mm)	.04" to 984' (1mm to 300m)	0.71" (18mm)	105' (32m) / min. 21" (53cm) / sec.	±0.04" (1mm)	18" (457mm)	digital	automatic	46"(L) x 31"(W) x 52"(H) 1150mm(L) x 770mm(W) x 1320mm(H)	324 lbs (147 kgs)

Electrical requirements: 110V 50/60Hz (230V 50/60Hz CE), <2amps Switchable *Dependent on material being cut

MODEL #	Max. Width Cut*	Length Cut	Max. Outside Dia. of Roll	3-in-1 Core Holder	Display	Accuracy of Cut	Cutter	Safety Guard	Auto Feed	Weight	Dimensions
zcM1500W	up to 2" (51mm)	.79" to 39" (20 to 999mm)	7" (178mm)	1", 1.4", 3" (25, 35, 76mm)	3 digit (LED)	±0.04" (1mm)	automatic	N/A	yes	5.5 lbs (2.49 kg)	5.4"(L) x 9.8"(W) x 6.2"(H) 137mm(L) x 249mm(W) x 159mm(H)
zcM2500	up to 2" (51mm)	1.2" to 39" (30 to 999mm)	7" (178mm)	1", 1.4", 3" (25, 35, 76mm)	3 digit (LED)	±0.04" (1mm)	automatic	yes	yes	5.9 lbs (2.68 kg)	5.4"(L) x 9.7"(W) x 6.2"(H) 137mm(L) x 245mm(W) x 150mm(H)

Electrical requirements: 117V 50/60Hz, <1 amp (230V 50/60Hz CE) *dependent on the thickness and hardness of the material to be cut

Let START test your material on our machines to ensure compatibility

THE ORIGINAL ELECTRONIC
TAPE DISPENSER

zcM·1500 zcM·2500

ELECTRONIC NON-ADHESIVE MATERIAL CUTTER

START International

RESOURCE GUIDE

Supplemental Manual

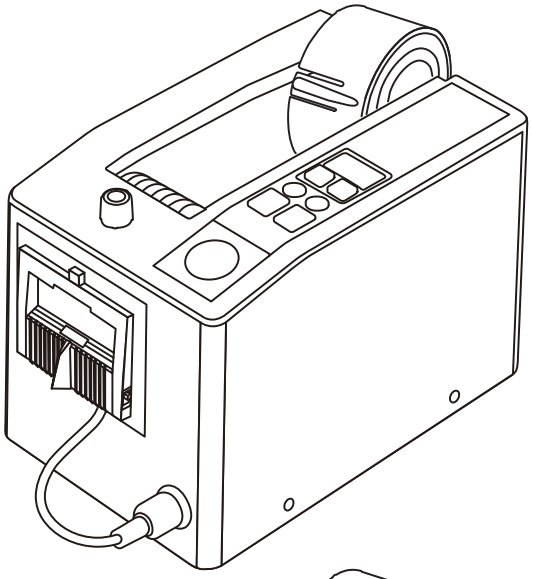

zcM1500

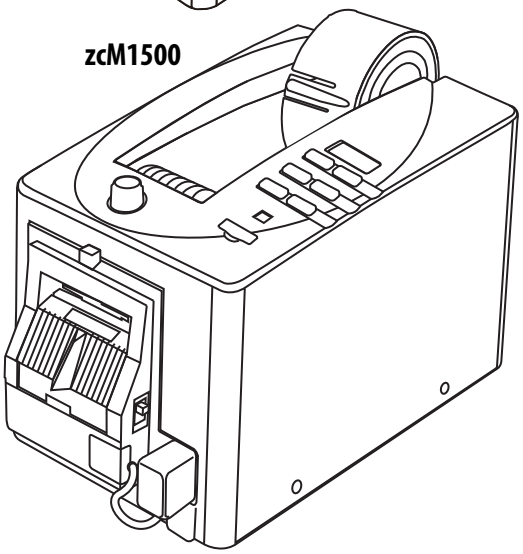

zcM2500

TO SET NON-ADHESIVE MATERIALS

1. Remove the reel.
2. Load your material onto the reel and place loaded reel.
   * *Standard 3-inch reel is included. Other sizes are optional, please contact your dealer.*
   **Ensure material is centered on the reel to prevent jamming.*
3. Place edge of material between upper and lower roller and feed slowly by pressing the (↓ - Feed) button.
4. To help smooth feeding use enclosed magnet guide.

TO SET MAGNET GUIDE

Place magnet guide onto the flat surface behind the rollers. Then slowly adjust the metal guide according to width of material.

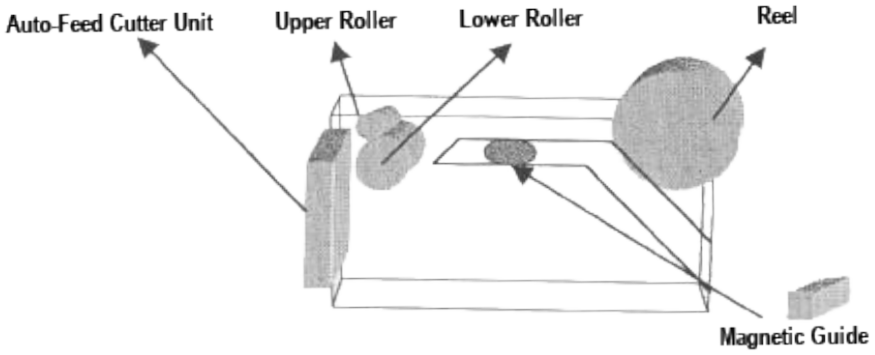

Thank you for purchasing the START International zcM1500 or zcM2500 electronic cutter for **non-adhesive materials.**

These models are designed to cut only non-adhesive materials such as tubing, wiring, and non-adhesive tape up to 50 mm wide. **Do not use** them with adhesive materials.

The zcM2500 includes all the features of the zcM1500, plus a safety guard cutter.

CAUTION:

There are many types of non-adhesive materials, and some may not be compatible with this machine due to their characteristics or thickness. If you experience difficulty cutting a material, contact your dealer for assistance. Materials with any adhesive, even low-adhesive, cannot be cut.

© START International