

OPERATOR MANUAL

TBC552L

Includes Programming

www.STARTinternational.com
4270 Airborn Dr., Addison TX, 75001, +1 972.248.1999

Table of Contents

Specifications 03

Security 03

Safety Precautions 04

Features 05

How to Unpack 06

How to Adjust Knife 07

Key Functions 08

How to Program 09

TBC552L Drawing A-1
Cutting Part 10

TBC552L Parts List A-1
Cutting Part List 11

TBC552L Drawing A-2
Cutting Part 12

TBC552L Parts List A-2
Cutting Part List 13

TBC552L Drawing B
Feeding Part 14

TBC552L Parts List B
Feeding Part List 15

TBC552L Drawing C
Reel Hanger Part 16

TBC552L Parts List C
Reel Hanger Part List 17

TBC552L Reel Hanger Parts 18

TBC552L Reel Hanger Assembly 19

Basic Troubleshooting 20

Technical/Customer Service/Returns 21

Warranty Policy 21

Freight 21

General 22

Conformity Declarations 22

Specifications

MODEL (TBC-)	552L (552L-2 for 220V version)
KNIFE LENGTH/Max Material Width	9.0" (230 mm)/ 8.3" (210mm)
CUT LENGTH	0.04" (1 mm) - 164' (50M)
MAX MATERIAL THICKNESS	0.6" (15 mm)
PRODUCTIVITY	17 - 28 pcs/ min. (39.4"/ 1 M length)
ACCURACY	± 0.4" (1 mm)
MATERIAL ROLL MAX. WEIGHT/O.D.	44.1 lbs. (20 Kg)/ 21.7" (550 mm)
MACHINE DIMENSIONS	31" (790mm) x 22" (550mm) x 44 " (1115mm)

Before operating the equipment, read and familiarize yourself with the following operating and safety instructions. SAVE THESE INSTRUCTIONS FOR FUTURE REFERENCE. Save the original box and packaging. Use this packaging to ship the equipment if repairs are needed.

Security

For enhanced security, operators must undergo comprehensive training covering machine inspection, maintenance, and operation. Emphasis should be on proper setup, work area safety, and vigilant detection of broken or damaged parts. Approved methods for equipment cleaning and parts replacement must be thoroughly understood. Prior to operation, operators must be trained on all safety features, including the use of proper personal protective equipment such as hand, eye, and face protection. Loose-fitting clothing is strictly prohibited.



The machine incorporates key precautionary features, including:
1. Emergency Stop Button: Pressing this button immediately stops and shuts off the machine.

To resume operation, operators must lift and turn the emergency button.



3. Knife Safety Guard. A metal cover installed over the cutting blades to prevent blade exposure or accidental injury. The safety guard will not fully prevent injury if fingers are deliberately maneuvered under the cover.



Safety Precautions

To ensure safe operation, read the following statements and understand their meaning. This manual contains safety precautions which are explained below. Please read carefully.



WARNING
Warning is used to indicate the presence of a hazard that will or can cause severe personal injury or death.



CAUTION
Caution is used to indicate the presence of a hazard that will or can cause minor or major personal injury if the caution is ignored.

NOTICE: Notice is used to note information that is important but not hazard-related.



WARNING
Severe injury can occur if this equipment is not used properly

To reduce risk of injury or damage to the machine:

- Keep out of reach of children.
- Do not turn equipment on unless all guards are in place.
- Do not feed material by hand: always allow the machine to forward the material.
- Machine must be connected to a properly grounded electrical supply matching the nameplate rating.
- Always unplug machine before cleaning.
- Do not place hands or any object in the cutting zone when blade is active.
- Keep machine away from water; avoid water jets during cleaning.
- Machine should only be used in a flat, leveled position.
- Do not operate unattended.
- Install or locate this machine only in accordance with the provided installation instructions.
- Do not operate this machine if it has a damaged cord or a plug, if it is not working properly or if it has been damaged or dropped.
- Do not immerse the cord or plug in water. Keep the cord away from heated surfaces.
- Do not use an extension cord with this machine. Do not plug this machine into a power strip or multi-outlet power cord.
- Do not spray controls or outside of machine with liquids or cleaning agents.
- Keep machine and power cord away from open flames, electric burners or excessive heat.
- When cutting double or triple rolls simultaneously, ensure that the material rolls feed in opposite directions (&).

Features

Your START International TBC552L Heavy-Duty Non-Adhesive Material Cutter automatically dispenses, measures, and cuts non-adhesive materials.

- Ideal for heavy production to cut Tubing, Sleeving, Nomex®, Velcro®, etc.
- Programmable cuts.
- Adjustable cutting speeds for faster production or slower for training.
- All electric microprocessor controlled
- Automatic shut-off feature stops automatically if material runs out during operation
- Easy to use; set length, quantity and feed speed then press start! Pressure roller on the feed roller is adjustable for thin or smooth materials.
- Accuracy by means of stepper motor
- Cutter safety guard included
- No tooling required to cut different materials. Cutting blade is made of high-speed steel (HSS)

How to Unpack the TBC552L

NOTICE: Once unpacked make sure Safety Guard is installed correctly.

Installing the Cutting Machine on the Moving Frame

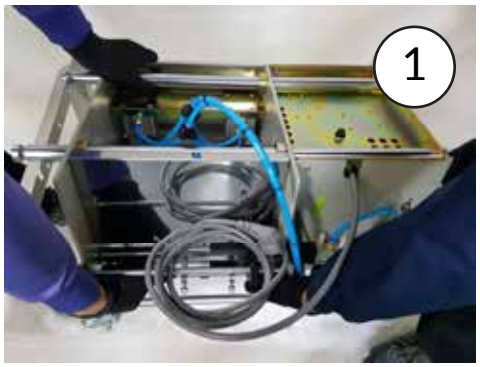

1. 1. Ensure your hands are in a safe position.



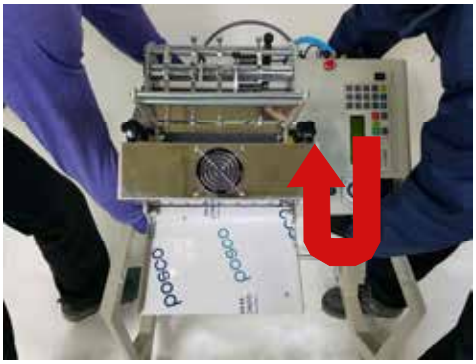



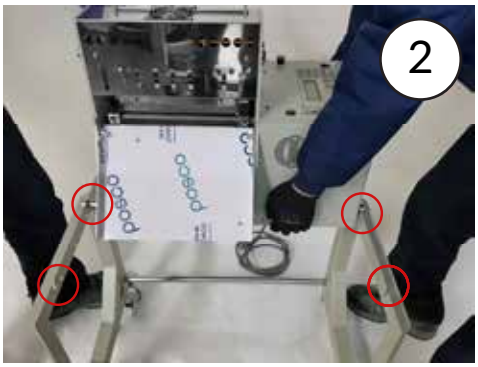

2. Begin by securing the machine at the rear two holes (there are a total of four holes for mounting the machine on the moving frame).



3. Next, lift and secure the machine at all four holes.



4. Finally, fasten the levers to prevent any movement of the machine during operation.

The machine is now ready to be used.

How to Adjust the Knife

WARNING
Severe injury can occur if this equipment is not used properly

The knife of the TBC552L cuts material similar to scissors. If there is a gap between the upper and lower knives, it can lead to cutting issues. If you're experiencing cutting problems due to this gap, this document will assist you.

As shown in the first image, the gap can be adjusted using five bolts. Before making any adjustments, please loosen the clamping bolts (#B-15) slightly to allow the lower knife to move freely. If

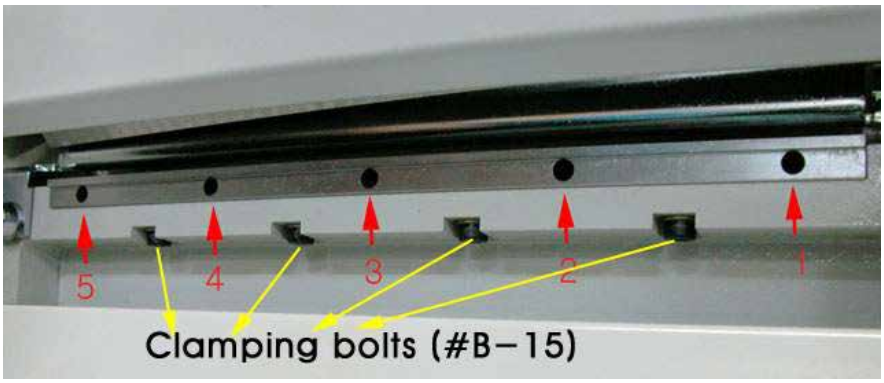

To adjust the knives, turn the adjustment screw clockwise (CW) to bring the lower knife closer to the upper knife. Conversely, turning it counterclockwise (CCW) will move the lower knife away from the upper knife.

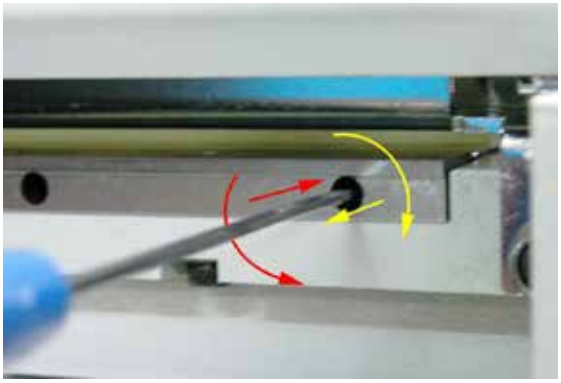

First, lower the upper knife slightly, as shown in the image below. Next, turn screw #5 to bring the lower knife closer to the upper knife. Then, adjust screws #1 to #4 to fine-tune the positioning of the lower knife.

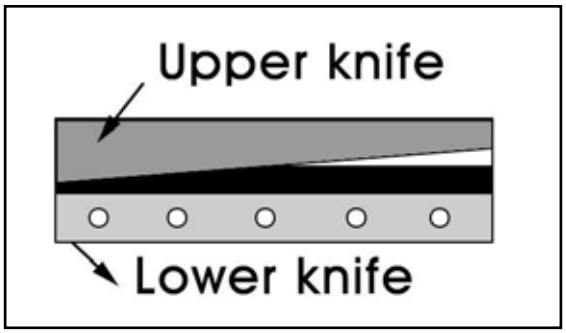

After completing these adjustments, test the setup with a piece of paper to identify any uncut edges. To close any gaps on the knife side that isn't cutting, turn the appropriate screws gradually, making adjustments of about 5 degrees at a time.

Once you've finished the adjustments, be sure to securely fasten all clamping bolts (#B-15). If you need any further assistance, please feel free to contact us at any time.

Key Functions



Current length on display will reset to "0".



All of current length and current QTY on display will reset to "0"



Moving knife only.
① to cut the material for test.
② to take out the material jammed between knife blades.
③ for balancing of knife blades in exchange



Cuts an additional one.



Restoring to normal condition in ERROR (red LED) and inputting parameter or program.





To move the roller for mounting the material on the machine; Key 4 moves the material foward and Key 6 moves the material backward.



Speed up (The current speed appears on the left-upside of LCD display with "%". Normal speed : 50%, Maximum speed : 100%)
* Speed up is possible at any time (operation or stop) and set-speed will not be changed even if you press RESET button or power off & on.



Speed down (The current speed appears on the left-upside of LCD display with "%". Normal speed : 50%, Minimum speed : 0%)
* Speed down is possible at any time (operation or stop) and set-speed will not be changed even if you press RESET button or power off & on.



To insert a new program during programs already inputted and running



To delete (or backspace) the wrong input while programing



Function used to create cutting programs

How to Program the TBC552L

for a Single, Double and Triple Cut (dependent on model)

For A Single Cutting:

For example, the below instructions will use the following:

Cutting Length: 70 mm
Cutting Quantity: 120 pieces



Turn on the Power

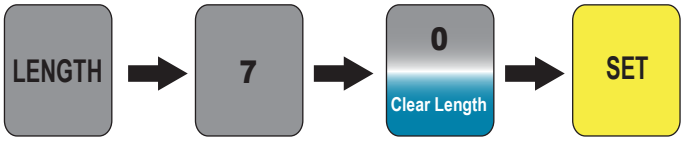

Set cutting length by pressing LENGTH, press the correct numbers for your length, press SET

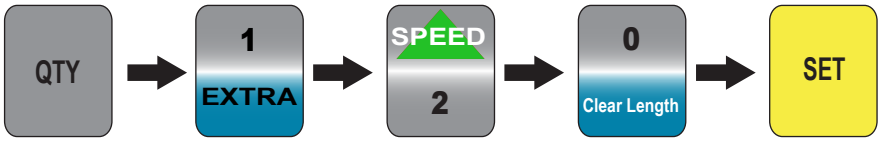

Set cutting quantity by pressing QTY, press the correct numbers for your quantity, press SET

On screen results should look like this:





Press START to begin

TBC552L DRAWING A-1

(Cutting Part)

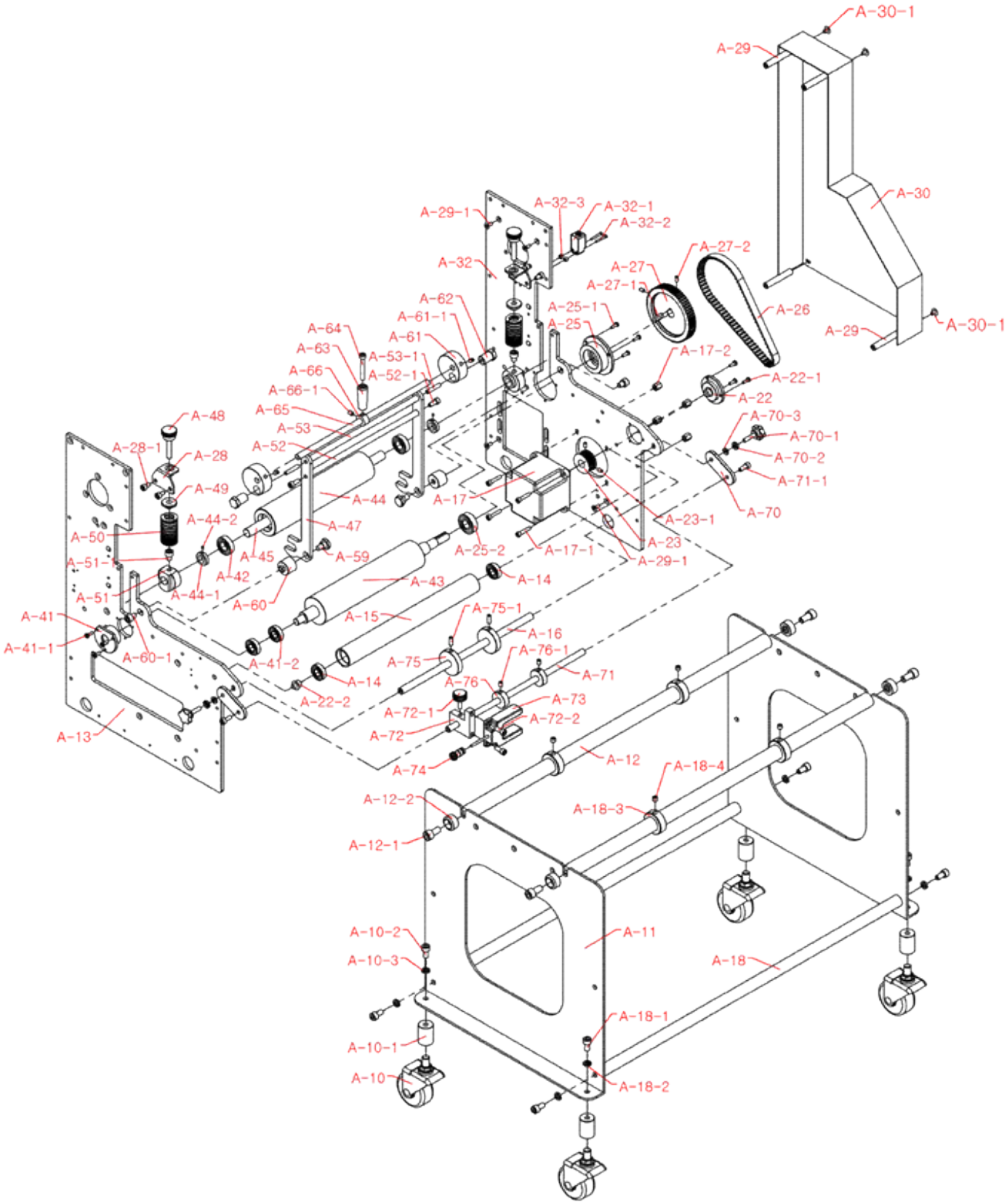

TBC552L DRAWING A-2

(Cutting Part)

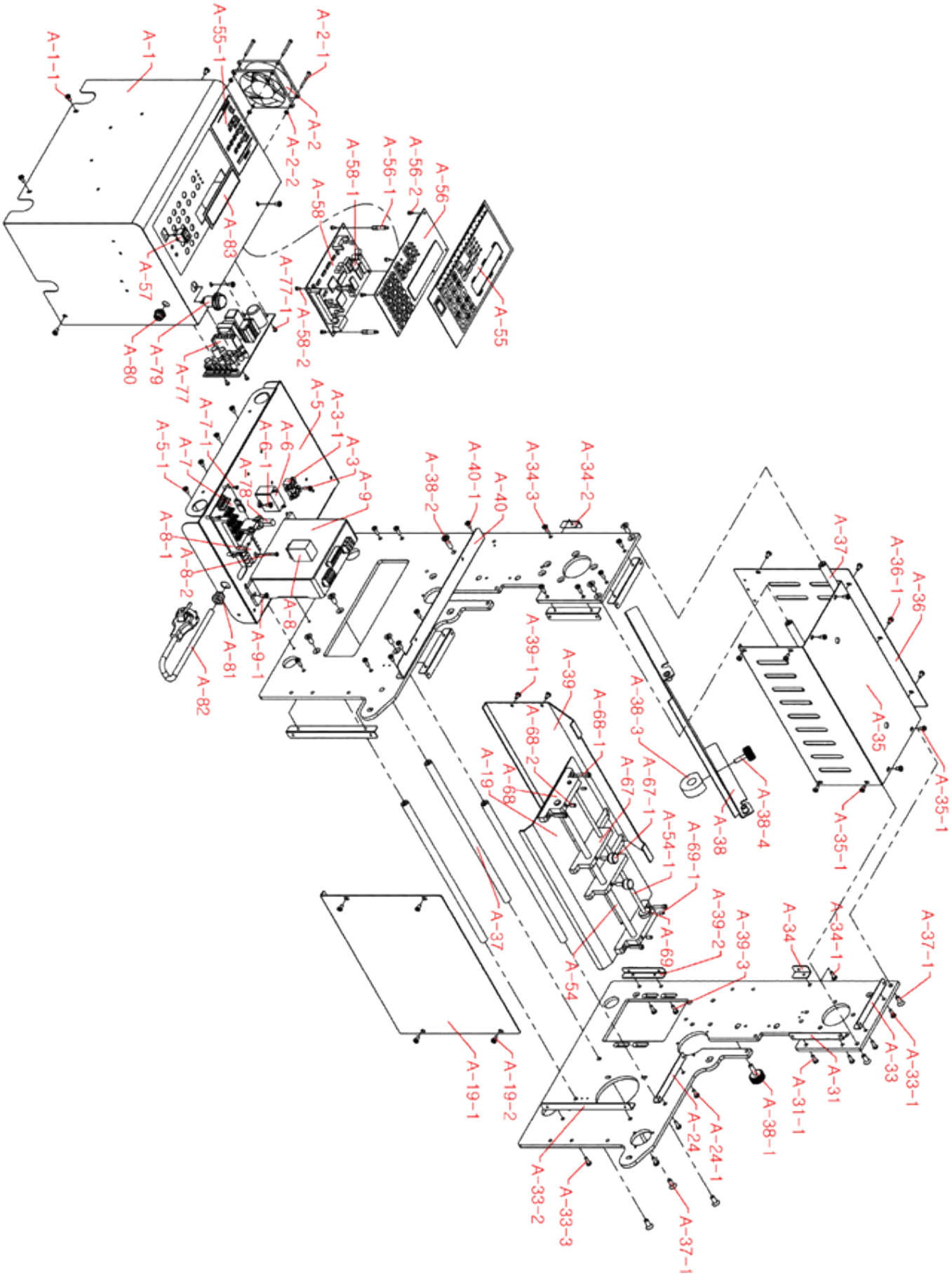

TBC552L PART LIST A-1

(Cutting Part)

Part No.	Description	Part No.	Description
A-1	CONTROL CASE	A-22	GUIDE ROLLER BEARING HOUSING
A-1-1	Clamping Bolt/M4*8	A-22-1	Clamping Bolt/M4*12
A-2	COOLING FAN	A-22-2	Ball Bearing Pin
A-2-1	Round Bolt/M3*30	A-23	ROLLER TIME GEAR(S)
A-2-2	Nut/M3	A-23-1	Socket Set Screw/M5*8
A-3	TERMINAL BLOCK	A-24	ANGLE NUT
A-3-1	Clamping Bolt/M4*12	A-24-1	Clamping Bolt/M4*12
A-5	CONTROL BASE	A-25	ROLLER BEARING HOUSING(L)
A-5-1	Clamping Bolt/M4*8	A-25-1	Clamping Bolt/M4*12
A-6	CONDENSOR	A-25-2	Ball Bearing (#6202)
A-6-1	Clamping Bolt/M4*8	A-26	TIMING BELT
A-7	IO BOARD	A-27	TIMING GEAR
A-7-1	Clamping Bolt/M4*8	A-27-1	Roller Time Gear Key
A-8	RELAY	A-27-2	Socket Set Screw/M5*8
A-8-1	RELAY SOCKET	A-28	ROLLER TENSION BRACKET
A-8-2	Clamping Bolt/M3*20	A-28-1	Wrench Bolt/M6*10
A-9	DRIVER	A-29	SAFTY COVER SUPPORT
A-9-1	Clamping Bolt/M4*12	A-29-1	Flat bolt/M5*15
A-10	WHEEL	A-30	SAFTY COVER
A-10-1	WHEEL CLAMPING NUT	A-30-1	Trust Bolt/M5*8
A-10-2	Wrench Bolt/M8*15	A-31	ANGLE NUT
A-10-3	Spring Washer/M8	A-31-1	Clamping Bolt/M4*12
A-11	ANGLE FRAME	A-32	LEFT FRAME
A-12	ANGLE SHAFT-1	A-32-1	Counting Sensor
A-12-1	Wrench Bolt/M10*20	A-32-2	Clamping Bolt/M3*22
A-12-2	Neck Washer/M10	A-32-3	Counting Sensor Supporter
A-13	RIGHT FRAME	A-33	ANGLE NUT
A-14	Ball Bearing (#6001)	A-33-1	Clamping Bolt/M4*12
A-15	GUIDE ROLLER	A-33-2	ANGLE NUT
A-16	BACK GUIDE HEX PIN	A-33-3	Clamping Bolt/M4*12
A-17	STEP MOTER	A-34	ANGLE NUT
A-17-1	Wrench Bolt/M5*25	A-34-1	Clamping Bolt/M4*12
A-17-2	Stepping Motor Support	A-34-2	ANGLE NUT
A-18	ANGLE SHAFT-2	A-34-3	Clamping Bolt/M4*12
A-18-1	Wrench Bolt/M8*15	A-35	UPPER COVER
A-18-2	Spring Washer/M8	A-35-1	Clamping Bolt/M4*8
A-18-3	Frame Clamping Riing	A-36	FRONT COVER
A-18-4	Socket Set Screw/M8*6	A-36-1	Clamping Bolt/M4*8
A-19	FRONT COVER	A-37	SUPPORT
A-19-1	Lower Rear Cover	A-37-1	Flat bolt/M6*15
A-19-2	Clamping Bolt/M4*8	A-38	PRODUCT GUIDE

TBC552L PART LIST A-2

(Cutting Part)

Part No.	Description	Part No.	Description
A-38-1	Knob Bolt	A-60	Lever Clamping Nut
A-38-2	Round Bolt/M6*20	A-60-1	Wrench Bolt/M8*10
A-38-3	Tape Guide Nut	A-61	Roller shift up bracket
A-38-4	Knob Bolt	A-61-1	Socket Set Screw/M6*8
A-39	Front Cover	A-62	Roller shift up nut
A-39-1	Clamping Bolt/M4*8	A-63	Roller shift up knob
A-39-2	ANGLE NUT	A-64	Wrench Bolt/M6*45
A-39-3	Clamping Bolt/M4*12	A-65	Roller shift up shaft
A-40	ANGLE NUT	A-66	Roller shift up ring
A-40-1	Clamping Bolt/M4*8	A-66-1	Socket Set Screw/M6*8
A-41	Roller Ball Bearing Housing (R)	A-67	Guide
A-41-1	Clamping Bolt/M4*12	A-67-1	Knob Bolt
A-41-2	Ball Bearing (#6001)	A-68	Guide
A-42	Ball Bearing (#6002)	A-68-1	Wrench Bolt/M4*20
A-43	LOWER ROLLER	A-68-2	Socket Set Screw/M5*8
A-44	UPPER ROLLER	A-69	Guide Aux. Shaft Ring
A-44-1	UPPER ROLLER SPACE RING	A-69-1	Socket Set Screw/M4*8
A-44-2	Socket Set Screw/M3*4	A-70	Rear aux. guide
A-45	UPPER ROLLER SHAFT	A-70-1	Knob Bolt
A-47	LEVER	A-70-2	Neck Washer/M6
A-48	Knob Bolt	A-70-3	Washer/M6
A-49	PRESSURE CONTROL SPRING COVER	A-71	Stop Switch Shaft
A-50	ROLLER PRESSURE CONTROL SPRING	A-71-1	Wrench Bolt/M6*15
A-51	UPPPER ROLLER GUIDE BLOCK	A-72	stopper bracket
A-51-1	Wrench Bolt/M8*10	A-72-1	Knob Bolt
A-52	LEVER SHAFT-1	A-72-2	Wrench Bolt/M6*15
A-52-1	Wrench Bolt/M6*15	A-73	Photo Sensor
A-53	LEVER SHAFT-2	A-74	Connector
A-53-1	Socket Set Screw/M6*30	A-75	Rear Guide Ring-1
A-54	GUIDE SHAFT-1	A-75-1	Socket Set Screw/M6*15
A-54-1	GUIDE SHAFT-2	A-76	Rear Guide Ring-2
A-55	Board skin	A-76-1	Socket Set Screw/M6*8
A-55-1	HOW TO USE	A-77	SMPS
A-56	OP BOARD	A-77-1	Clamping Bolt/M3*6
A-56-1	Op Supporter	A-78	Fuse Box
A-56-2	Clamping Bolt/M3*6	A-79	Emergency Switch
A-57	POWER SW	A-80	Connector
A-58	CONTROL BOARD	A-81	Cable Bush
A-58-1	ROM	A-82	Power Cord
A-58-2	Clamping Bolt/M3*6	A-83	Display cover
A-59	Lever Clamping Bolt		

TBC552L DRAWING B
(FEEDING PART)

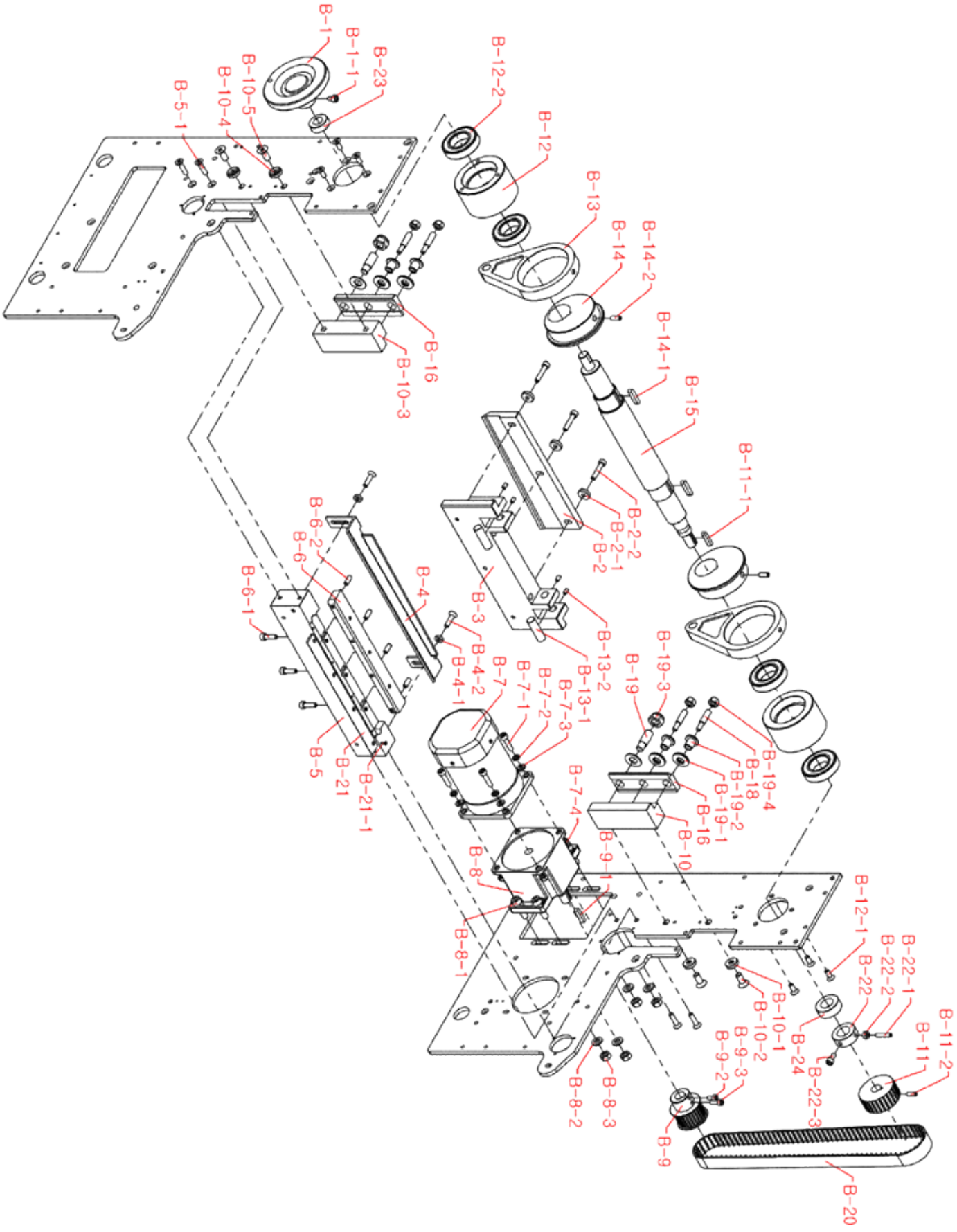

TBC552L PART LIST B
(FEEDING PART)

Part No.	Description	Part No.	Description
B-1	SHAFT KNOB	B-10-4	Neck Washer/M8
B-1-1	Wrench Bolt/M6*8	B-10-5	Flat bolt/M8*20
B-2	UPPER KNIFE	B-11	CHAIN GEAR-2
B-2-1	Neck Washer/M6	B-11-1	CHAIN GEAR KEY-2
B-2-2	Wrench Bolt/M6*30	B-11-2	Socket Set Screw/M5*15
B-3	UPPER KNIFE FRAME	B-12	CRANK BEARING HOUSING
B-4	FIXING BRACKET	B-12-1	Flat bolt/M6*15
B-4-1	Neck Washer/M6	B-12-2	Ball Bearing (#6006)
B-4-2	Flat bolt/M6*20	B-13	LING
B-5	LOWWER KNIFE BRACKET	B-13-1	LING PIN
B-5-1	Flat bolt/M6*20	B-13-2	Socket Set Screw/M5*8
B-6	LOWER KNIFE	B-14	CRANK
B-6-1	Wrench Bolt/M6*20	B-14-1	Crank Key
B-6-2	Socket Set Screw/M6*15	B-14-2	Socket Set Screw/M6*15
B-7	CUTTING MOTOR	B-15	CRANK SHAFT
B-7-1	Wrench Bolt/M6*25	B-16	PRESSURE PLATE
B-7-2	Spring Washer/M6	B-18	Upper Knife Pressure-Control Bolt-1
B-7-3	Washer/M6	B-19	Upper Knife Pressure-Control Bolt-2
B-7-4	Nut/M6	B-19-1	Flat Spring
B-8	REDUCTION GEAR	B-19-2	Leaf Spring Bracket
B-8-1	Wrench Bolt/M8*30	B-19-3	Nylon Nut-1/M12
B-8-2	Washer/M8	B-19-4	Nylon Nut-2/M8
B-8-3	Nut/M8	B-20	Timing Belt
B-9	CHAIN GEAR-1	B-21	Space Plate
B-9-1	CHAIN GEAR KEY-1	B-21-1	Flat bolt/M3*8
B-9-2	Wrench Bolt/M5*10	B-22	Counting Sensor Ring
B-9-3	Wrench Bolt/M5*15	B-22-1	Counting Sensor Bolt/M6*25
B-10	GUIDE BLOCK(L)	B-22-2	Nut/M6
B-10-1	Neck Washer/M8	B-22-3	Wrench Bolt/M6*12
B-10-2	Flat bolt/M8*20	B-23	Acetal Ring-1
B-10-3	GUIDE BLOCK(R)	B-24	Acetal Ring-2

TBC552L DRAWING C
(REEL HANGER PART)

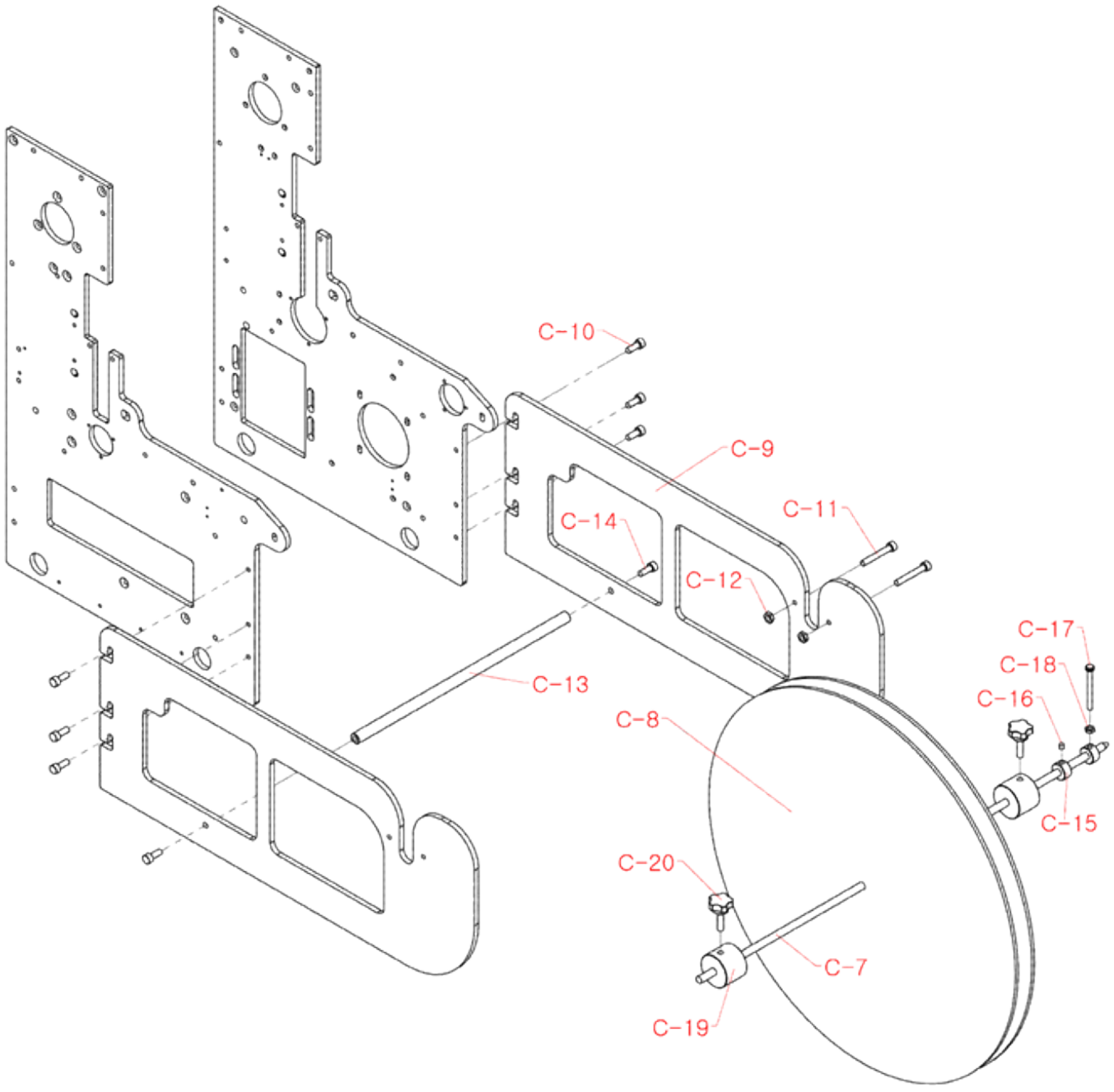

TBC552L PART LIST C
(REEL HANGER PART)

Part No.	Description	Part No.	Description
C-7	Roll-hanger Shaft		
C-8	Acrylic Wheel		
C-9	Roll-hanger Frame		
C-10	Wrench Bolt/M6*20		
C-11	Wrench Bolt/M6*40		
C-12	Nut/M6		
C-13	Roll-hanger Clamping Shaft		
C-14	Wrench Bolt/M6*15		
C-15	Roll hanger shaft collar		
C-16	Socket Set Screw/M5*5		
C-17	Round Bolt/M5*50		
C-18	Nut/M5		
C-19	Disk fixing collar		
C-20	Knob Bolt		

TBC552L REEL HANGER Parts

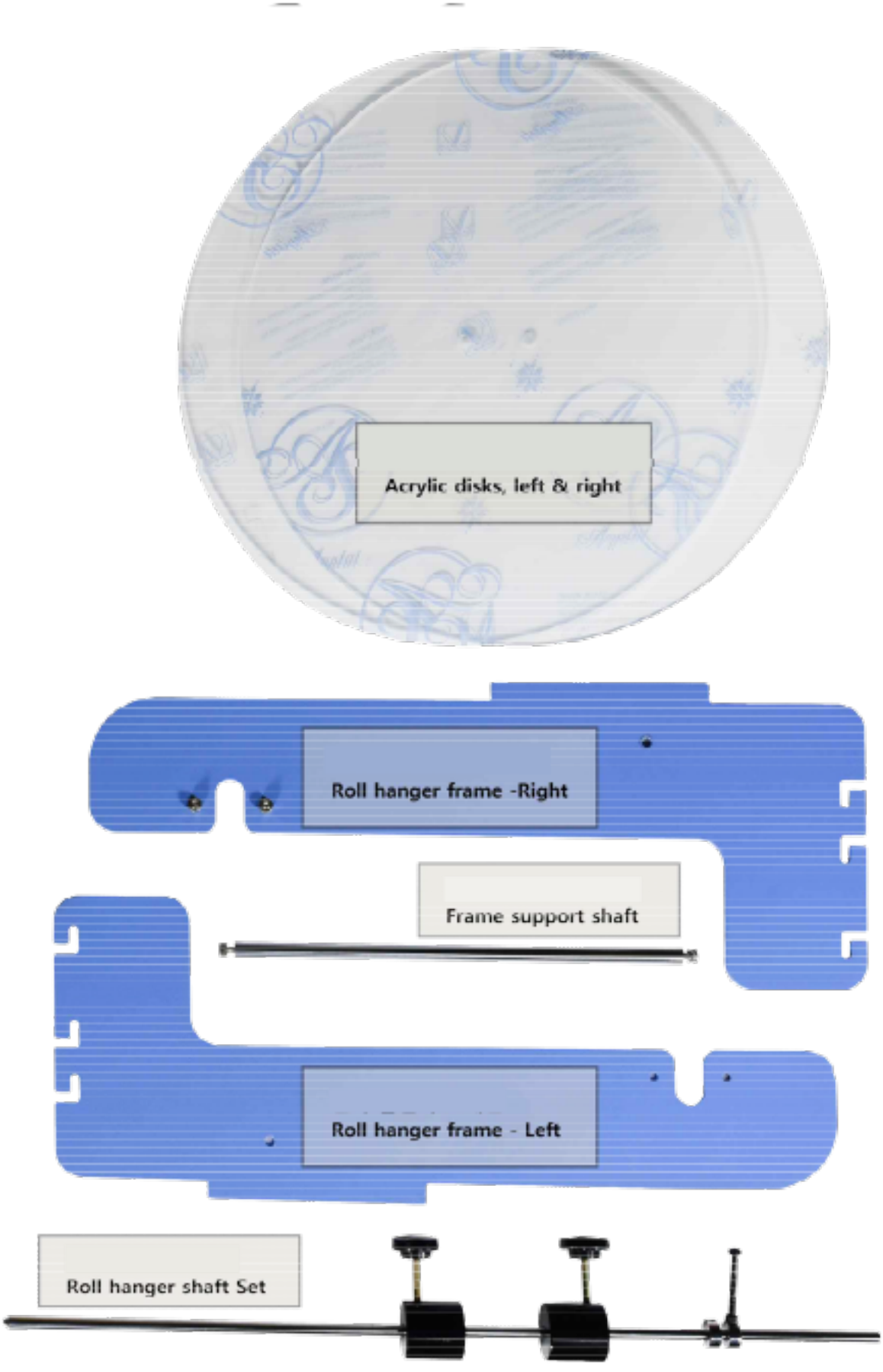

TBC552L REEL HANGER Assembly

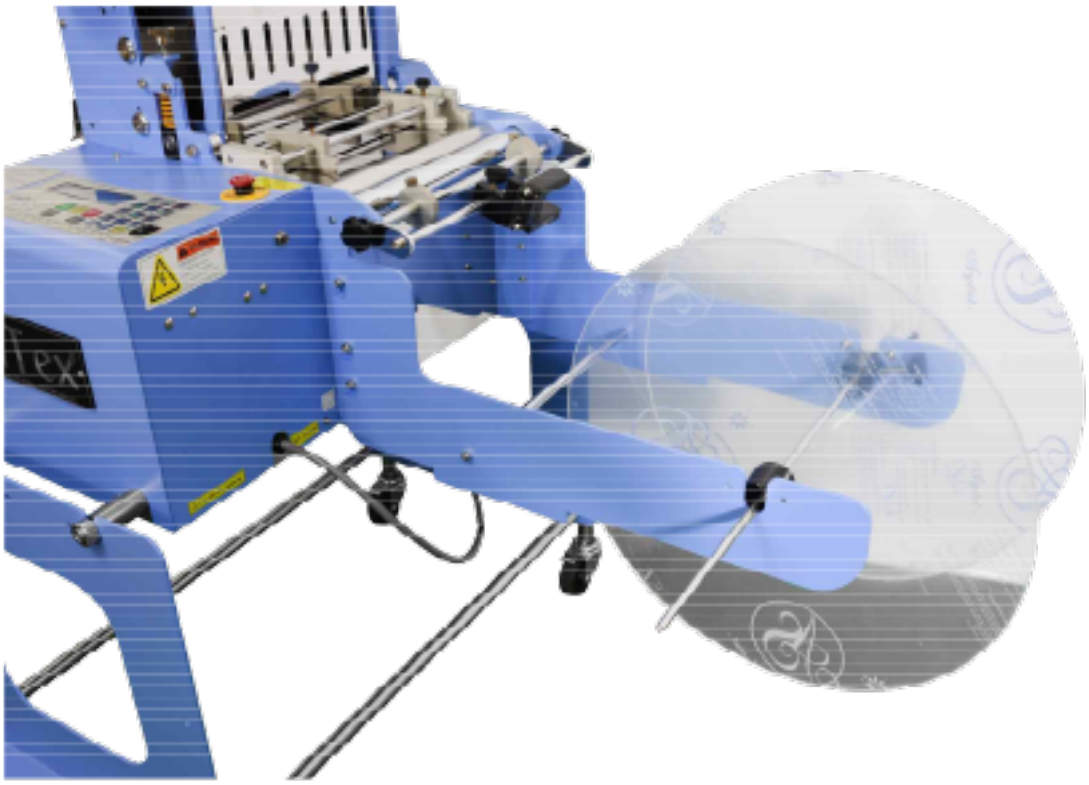

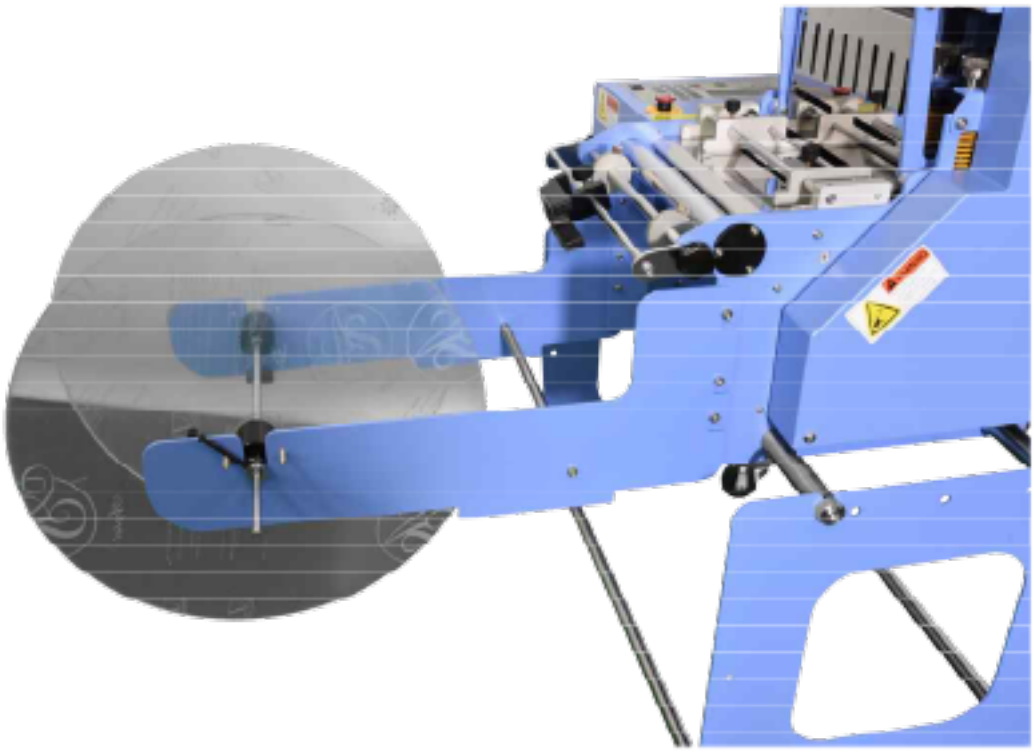

BASIC TROUBLESHOOTING

No	Troubles		Appicable model	Causes & Measures
1	No power supply		All models	- Check if electric cord is connected well. - Check if the fuse blows out or not.
2	Power is on, but no work	Feeding roller doesn't work.	All models	- Check if there is inserted any alien substance in roller. - If current length on display is changed, exchange drive board. - If current length on display is not changed, exchange Control board(MB).
		Knife doesn't work.	All models	- Check if pressure plates of upper knife are too much fastened or not.
		LCD display doesn't work.	All models	- After opening the cover, check the connetion. (especially between Operation & MB board)
		All functions don't work	Al models	- Check if auto-stop device lies down. If any, raise it up.
3	Material is not cut.		Hot cutter (H, LH, SH, HX)	- Check if temperature goes up to set-degree. - Check if knife blades are even(parallel).
4	Material is cut onesidedly.		All models	- Check if blades are damaged or weared. - After making both knives close each other by M/CUT button and check if they are even or not. (If they are not even, adjust them by bo lts)
5	Cut-length is different from set-length.		All models	- Test cutting after loosening material from the reel by hand or attaching feeding device.
6	It cuts before the cutting line of labels.		Label cutter (S, SH)	- Move the sensor towards knife side as long as the difference by pushing.
7	It cuts after the cutting line of labels.		Label cutter (S, SH)	- Move the sensor towards counter-knife side as long as the difference by pushing.
8	ERROR on LCD & LED	ERROR CODE [064] >Sensor check Er	Label cutter (S, SH)	- Trouble in Mark sensor → · Check if the sensor is connected well or not. · Check if the sensor is adjusted well or not. (FILE NO 001) · Check if it is label problem or not.
		ERROR CODE [065] >CUT I/O Error!	All models	- Trouble in cutting motor or cutting sensor → · Upper knife moves 1~3 sec. and ERROR on display. Check the connection of cutting sensor. If not, exchange the cutting sensor. · Upper knife doesn't move and ERROR on display. Exchange the cutting motor or drive board.
		STOP INPUT !! CHECK STOP INP!	All models	- Auto stop device is pressed down or shortag e. → raise up the device and check shortage.
		(C)ACORD CTRL-OP AMC-T3KA VER1.7D	All models	- Bad connected ROM → Press ROM by hand or connect it again. (If not, change MB board)
		ERROR CODE[065] >CHECK CODE[003]	All models	- Change of FILE 003 in program by noise or mis-operation → Initialize the controller. ※ **How to Initialize**(programs to be initial) : press **SET**+**SHIFT/ESC** buttons and **RESET** button at the same time. (Press **RESET** later than other two keys.)
9	Operator feels electric current in touch of machine.		All models	- Connect the earth cord(green) to any bolt of backside of machine.
10	After exchange ROM, you should do initialize the controller, due to error message, if you cannot do initialization, please press "SHIFT/ESC' button to escape error message screen and then initialize the controller.			

Technical, Customer Service & Returns

For technical support or customer support, please visit www.startinternational.com for details, instructional videos, or guides. Please call START Customer Support at +1 (972) 248-1999, Monday-Friday; 9AM-5PM CST.

If a malfunction is detected take these steps to resolve any technical issue:

1. Please contact your customer service representative to describe the nature of your problem and to determine if your product is covered under warranty. Do not attempt to disassemble or repair the machine prior to talking to a representative or the warranty will be void.
2. Provide the product number, serial number and brief discription of the issue.
3. Submit pictures and short videos of the issue (over 90% of most problems are resolved with a video-call).
4. However, if it is **determined that your product needs to be submitted for repair an RMA number will be assigned. Shipping a product to us without an RMA # may delay your service.**
5. Please make sure to package your product properly with an excess amount of packaging material in order not to expose your product to shipping damage. Shipping damage is not covered under warranty.
6. Upon receiving the machine our START technician after 5 business days will send you feedback or schedule a videoconference. Once the repair is made and the machine has been sent back, after 2 weeks the work ticket will close, if no issues are reported.

Warranty Policy

START International warrants FOR 180 DAYS all parts against defects in design, materials and workmanship; knives/ blades and other consumable items are excl

Freight

All warranty serviced products must be returned to START International prepaid. START International will return the product back to the customer via preferred carrier at START International's expense. (Premium Freight service (FedEx Priority, UPS Red, etc.) is offered at the customer's expense.)

General

Our sole obligation under this warranty is limited to repair, replacement or credit of the purchase price, at our option, for the machines listed above, which do not perform properly the function for which they were designed.

Warranty repair is contingent upon our examination and determination that alleged defects have not been caused by misuse, abuse, improper installation or application, repair, alteration, accident or neglect in use, storage, transportation, or handling.
The above warranty and remedy constitutes START International sole liability hereunder and are in lieu and exclusive of all other warranties and remedies expressed, implied or statutory, including, but not limited to, those of merchantability and fitness for a particular purpose.

START International reserves the right to revise this policy at any time.

CONFORMITY DECLARATIONS

EU Declaration of Conformity - START International Inc. This declaration of conformity is issued under our sole responsibility that the products listed (i.e. Non-adhesive Cutter Models: TBC50-2, TBC50S-2, TBC50H-2, TBC552L-2, TBC555LM-2) meet European directives of:

- Low Voltage - Directive 2014/35EU
- Electromagnetic Compatibility (EMC) - Directive 2014/30/EU
- Machinery - Directive 2006/42/EU
- RoHS - Restriction of Use of Hazardous Substances - Directive 2011/65/EU
- Registration, Evaluation, Authorization and Restriction of Chemicals (REACH) - Regulation EC 1907/2006 of the European Parliament and of the Council.

Therefore, TBC50-2, TBC50S-2, TBC50H-2, TBC552L-2, TBC555LM-2 carry CE mark accordingly:

4270 Airborn Dr.
Addison TX, 75001

+1 972.248.1999

www.STARTinternational.com

TBC-553L

instructions



4270 Airborn Drive
Addison, TX 75001
tel: +1 (972) 248-1999
email: info@STARTinternational.com
www.STARTinternational.om

START®
International

How to operate TBC-553L

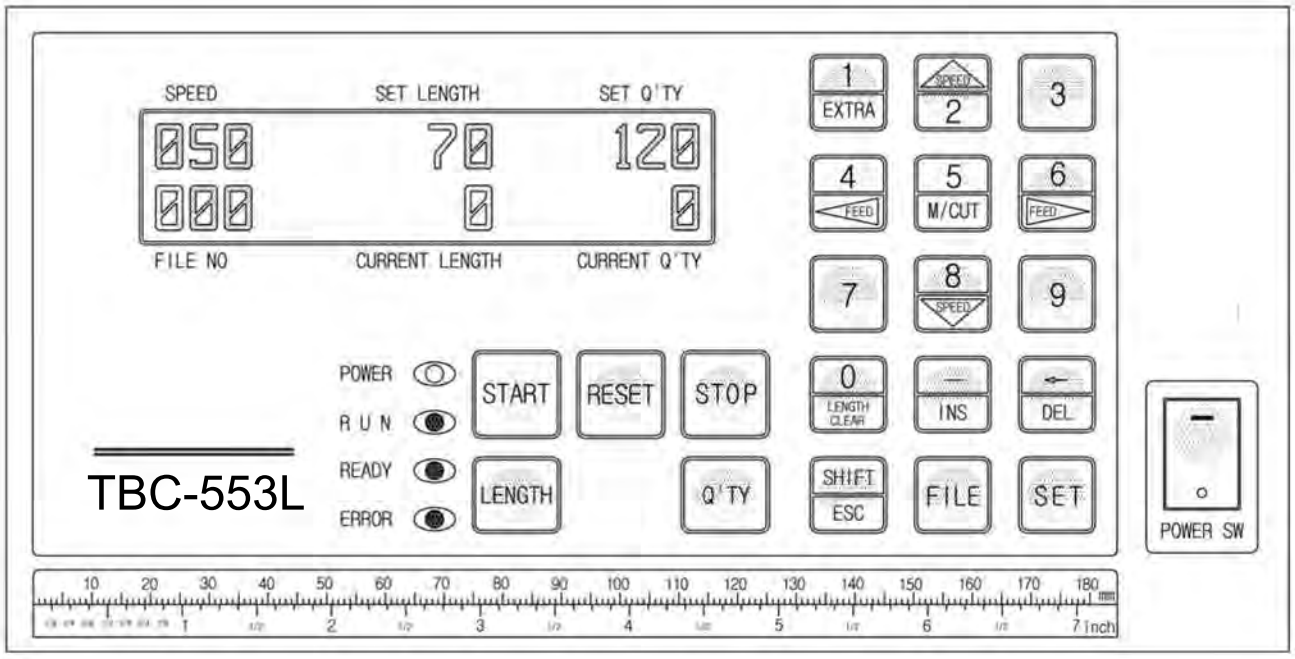

1. An example (Cutting length : 70mm, Cutting quantity : 120 pcs)



▷ Turn on the POWER SW.

▷ Set cutting length. (Press the following buttons in order.)

☞ [LENGTH] ⇒ [7] ⇒ [0 LENGTH CLEAR] ⇒ [SET]

▷ Set cutting quantity.

☞ [Q'TY] ⇒ [1 EXTRA] ⇒ [SPEED 2] ⇒ [0 LENGTH CLEAR] ⇒ [SET]

▷ Press START button.

☞ [START]

2. Key functions

0 / LENGTH CLEAR : Current length on display will be back to "0" at a stop.

RESET : All of current length and current q'ty on display will be back to "0".

5 / M/CUT : Moving knife only.

① to cut the material for test.
② to take out the material jammed between knife blades.
③ for balancing of knife blades in exchange.

1 / EXTRA : Cutting additional one.

SHIFT / ESC : Restoring to normal condition in ERROR(red LED) and inputting parameter or program.

4 / FEED 6 / FEED : to move the roller manually for mounting the material on the machine or for feeding it forwards or backwards.

SPEED / 2 — Speed up (The current speed appears on the left-upside of LCD display with "%". Normal speed : 50%, Maximum speed : 100%)

* Speed up & down is possible in any time(operation or stop) and set-speed will not be changed even though you press RESET button or power off & on.

8 / SPEED — Speed up (The current speed appears on the left-upside of LCD display with "%". Normal speed : 50%, Maximum speed : 0%)

* Speed up & down is possible in any time(operation or stop) and set-speed will not be changed even though you press RESET button or power off & on.

← / DEL : to correct wrong data.

FILE : Function for label cutting (applicable models : TBC-50S, TBC-50SH)

3. Specification

Model No.	Cutting Material	Knife	Power Supply	Max. Cutting Width	Range of Cutting Length	Cutting speed (length : 1M)	Machine Size (Net Weight)	Packing Size (Gross Weight)
TBC-553L	extra large material	Cold	AC110 /220V, 50/60Hz	310mm	1mm ~ 300M	17 ~ 28 cuts	510×690×940 (85kgs)	830×560×760 (90kgs)

4. Caution for use

- Before use, please confirm the voltage and make the ground(earth) connection.
- In case of cutting double or triple rolls at the same time, make materials fed oppositely(↷ & ↶), to prevent slipping by roll tension.
- Do not access hands or any object close to the working knife. (for safety)
- When the knife blade becomes dull, please use it after grinding with the grinding machine. (Please do not let the unskilled person grind manually or install the knife blade.)
- Please contact following address for further information.

START™ International

4270 Airborn Dr.
Addison, TX 75001
USA

www.startinternational.com
001.972.249.1999

HOW TO ADJUST KNIFE

Knife of TBC-520L/530L cuts material as like scissors.
If there is a gab between upper and lower knife, there will be a problem.

So if you have a cutting problem due to gab between upper and lower knife, this documents can help you.

As you can see, the gab can be adjusted by 5 bolts, refer to below image.
Before adjusting gab, please release bolts (#B-15, clamping bolts) a little to make lower knife movable.

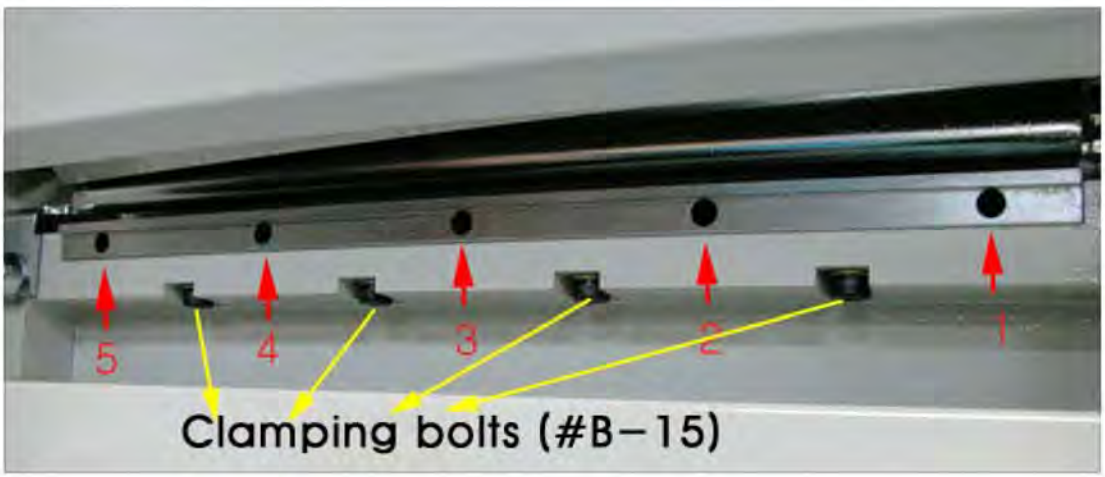

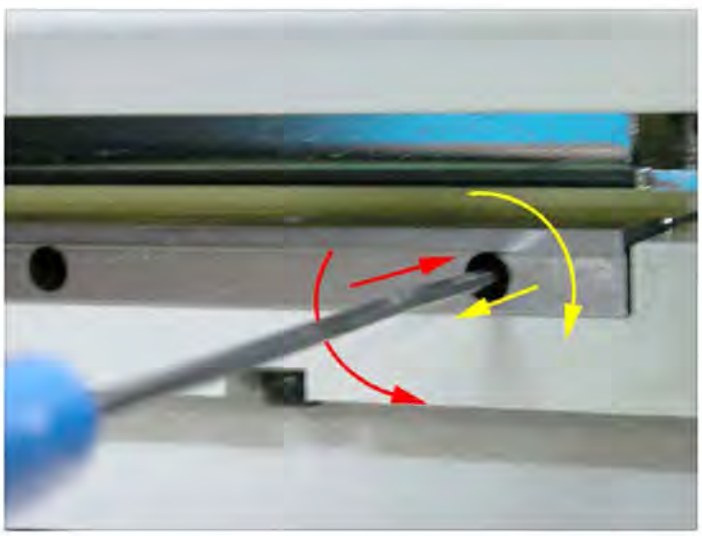

If you turn it by CW (clock wise) the lower knife will be close to upper knife.
And if you turn it by CCW (counter clock wise) the lower knife will move against upper knife.

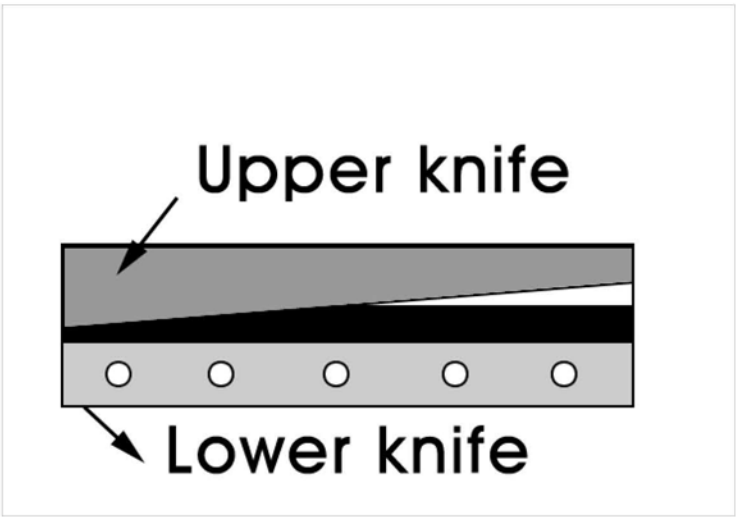

At first, please lay down upper knife a little, please refer to below image.

And then turn no. 5 screw to make lower knife to close to upper knife.

And then make lower knife close to upper knife by turning no. 1~4 screws.

After doing above steps, please test with paper and check which side of paper is not cut, and make those side of knife close to upper knife by turn proper screws.

Please turn it little by little, we recommend about 5 degrees a time.

After finishing, please fasten all #B-15, clamping bolts.

If you need further information, please contact us at any time.

TBC-553L PART LIST A

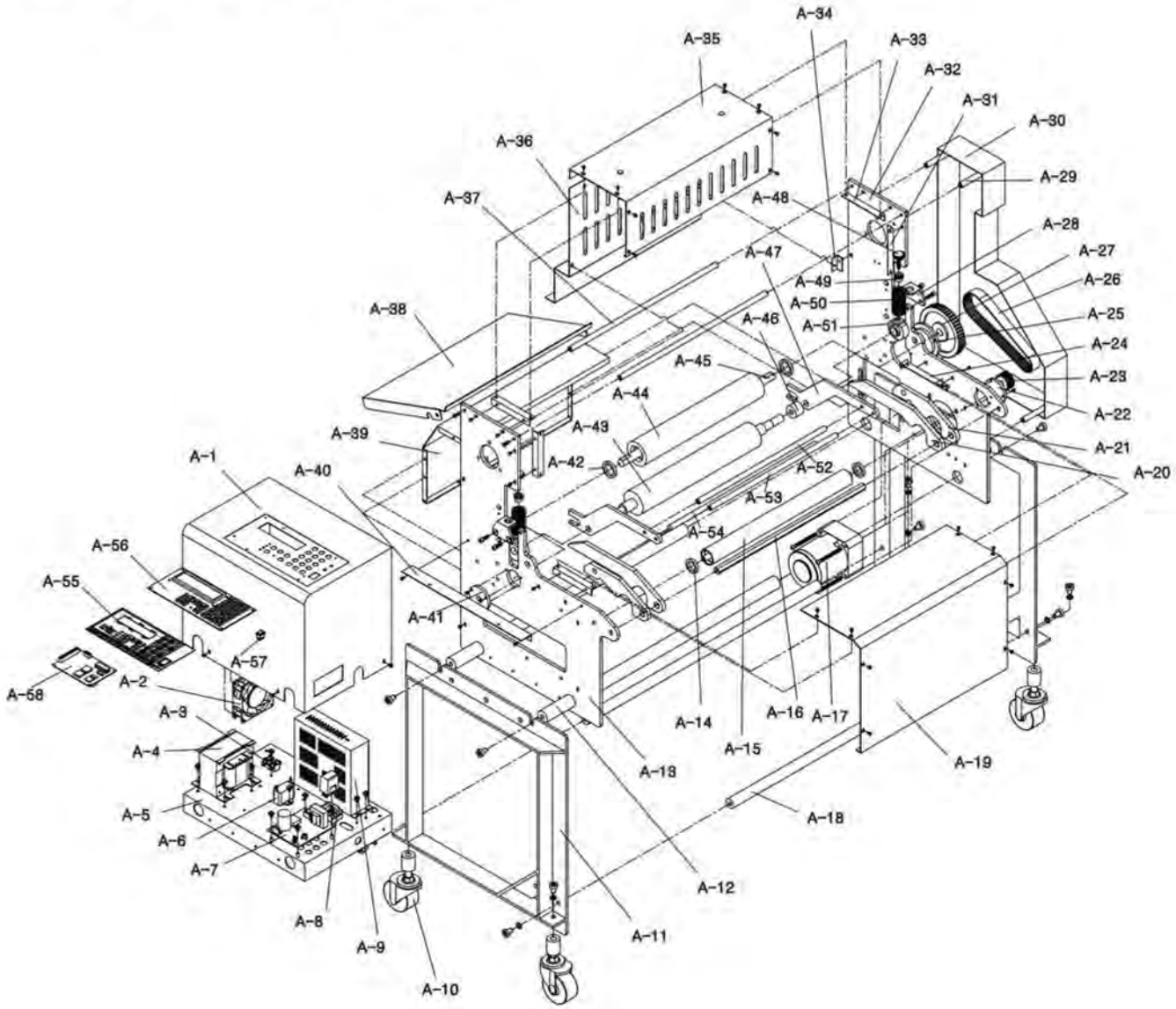

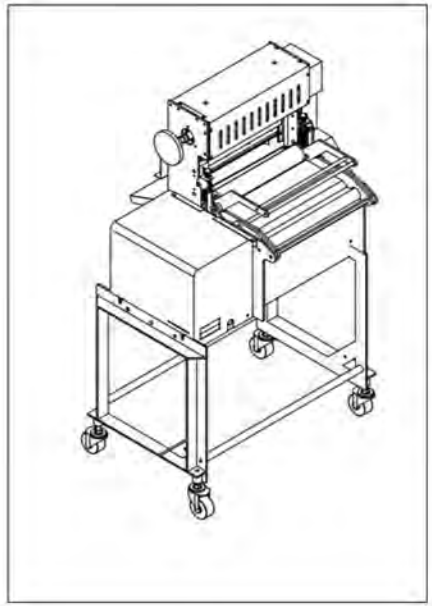

TBC-553L PART LIST A (CUTTING PART)

Part No.	Description	Part No.	Description
A-1	CONTROL CASE	A-30	SAFETY COVER
A-2	FAN	A-31	ANGLE NUT
A-3	TERMINAL	A-32	LIGHT FRAME
A-4	TRANSFORMER	A-33	ANGLE NUT
A-5	CONTROL BASE	A-34	ANGLE NUT
A-6	CONDENSER	A-35	UPPER COVER
A-7	DRIVE BOARD	A-36	FRONT COVER
A-8	RELAY	A-37	SUPPORT
A-9	DRIVE	A-38	PRODUCT GUIDE
A-10	WHEEL	A-39	REAR COVER
A-11	ANGLE FRAME	A-40	CONTROL ANGLE NUT
A-12	ANGLE SHAFT	A-41	ROLLER BEARING HOUSING
A-13	RIGHT FRAME	A-42	BEARING
A-14	BREAING	A-43	LOWER ROLLER
A-15	GUIDE ROLLER	A-44	UPPER ROLLER
A-16	REAR GUIDE SIX ANGLE PIN	A-45	UPPER ROLLER SHAFT
A-17	MOTOR	A-46	FIXING RING
A-18	ANGLE SHAFT	A-47	LEVER
A-19	FORNT COVER	A-48	HANDLE BOLT
A-20	REAR GUIDE SIX ANGLE PIN	A-49	PRESSURE CONTROL SPRING COVER
A-21	REAR GUIDE SIDE	A-50	PRESSURE SPRING
A-22	REAR GUIDE ROLLER BEARING HINGE	A-51	UPPER ROLLER GUIDE BLOCK
A-23	TIME GEAR	A-52	GUIDE SHAFT
A-24	ANGLE NUT	A-53	GUIDE SHAFT
A-25	ROLLER BEARING HOUSING (LIGHT)	A-54	GUIDE SHAFT
A-26	TIME BELT	A-55	PANEL
A-27	TIME GEAR	A-56	OP BOARD
A-28	ROLLER TANSTION BRACKET	A-57	POWER SWITCH
A-29	SAFETY COVER SUPPORT	A-58	CONTROL BOARD (MB)

TBC-553L PART LIST B

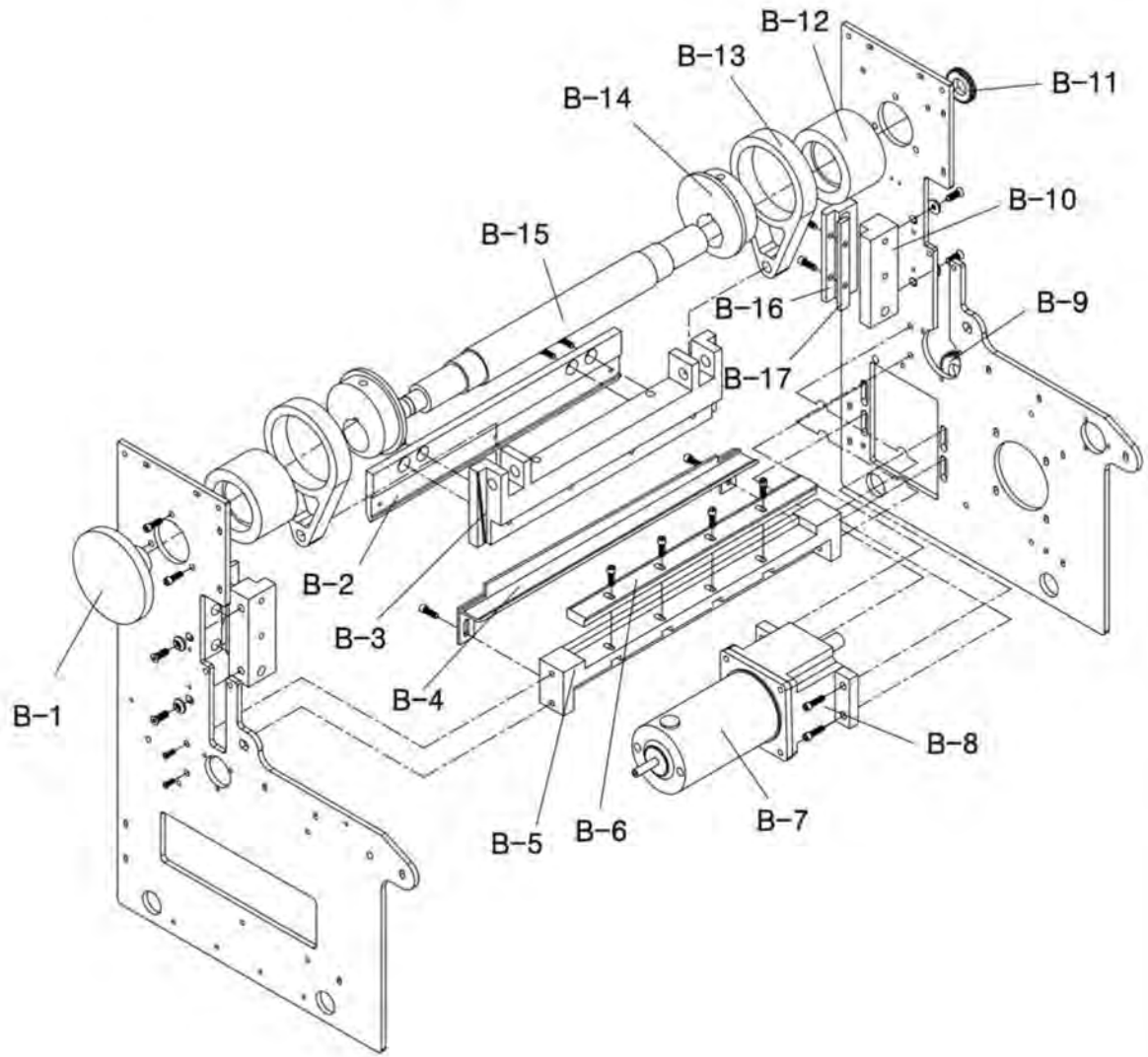

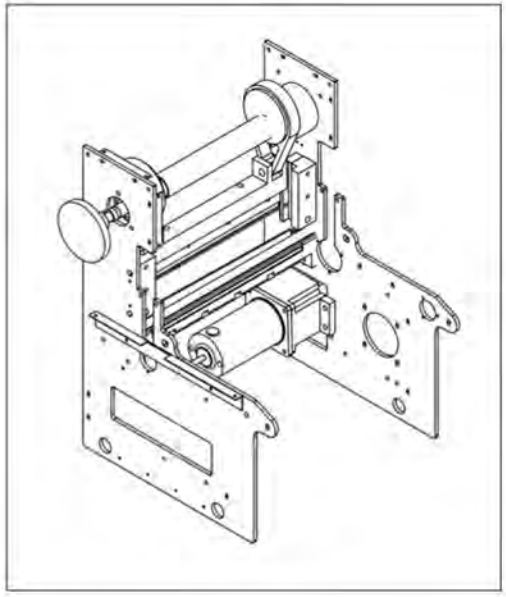

TBC-553L PART LIST B (FEEDING PART)

Part No.	Description	Part No.	Description
B-1	SHAFT HANDLE	B-21	
B-2	LOWER KNIFE	B-22	
B-3	LOWER KNIFE FRAME	B-23	
B-4	FIXING BRACKET	B-24	
B-5	LOWER KNIFE BRACKET	B-25	
B-6	UPPER KNIFE	B-26	
B-7	MOTOR	B-27	
B-8	DECELERATE	B-28	
B-9	GEAR	B-29	
B-10	GUIDE BLOCK	B-30	
B-11	GEAR	B-31	
B-12	CRANK BEARING HOUSING	B-32	
B-13	LINK	B-33	
B-14	CRANK	B-34	
B-15	CRANK SHAFT	B-35	
B-16	PRESSURE PLATE	B-36	
B-17	PRESSURE PLATE PAD	B-37	
B-18		B-38	
B-19		B-39	
B-20		B-40	

REEL HANGER

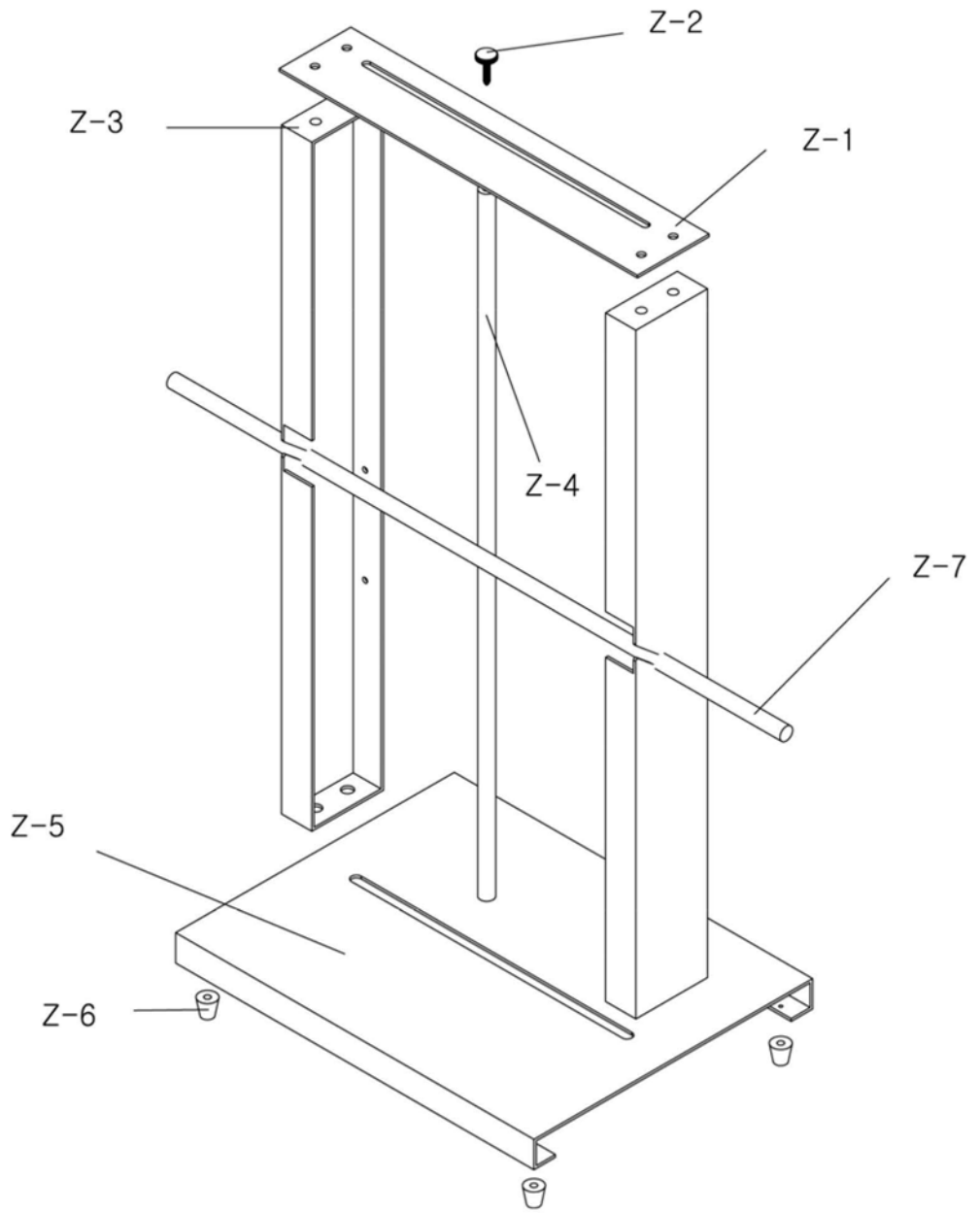

REEL HANGER

Part No.	Description	Part No.	Description
Z-1	SHAFT		
Z-2	HAND GRIP BOLT		
Z-3	ROLL HANGER FRAME		
Z-4	SHAFT		
Z-5	BASE		
Z-6	MATTER SHAFT		

Trouble-shooting of TBC-50 series

No	Troubles		Appicable model	Causes & Measures
1	No power supply		All models	- Check if electric cord is connected well. - Check if the fuse blows out or not.
2	Power is on, but no work	Feeding roller doesn't work.	All models	- Check if there is inserted any alien substance in roller. - If current length on display is changed, exchange drive board. - If current length on display is not changed, exchange Control board(MB).
		Knife doesn't work.	All models	- Check if pressure plates of upper knife are too much fastened or not.
		LCD display doesn't work.	All models	- After opening the cover, check the connetion. (especially between Operation & MB board)
		All functions don't work	Al models	- Check if auto-stop device lies down. If any, raise it up.
3	Material is not cut.		Hot cutter (H, LH, SH, HX)	- Check if temperature goes up to set-degree. - Check if knife blades are even(parallel).
4	Material is cut onesidedly.		All models	- Check if blades are damaged or weared. - After making both knives close each other by M/CUT button and check if they are even or not. (If they are not even, adjust them by bolts)
5	Cut-length is different from set-length.		All models	- Test cutting after loosening material from the reel by hand or attaching feeding device.
6	It cuts before the cutting line of labels.		Label cutter (S, SH)	- Move the sensor towards knife side as long as the difference by pushing.
7	It cuts after the cutting line of labels.		Label cutter (S, SH)	- Move the sensor towards counter-knife side as long as the difference by pushing.
8	ERROR on LCD & LED	ERROR CODE [064] >Sensor check Er	Label cutter (S, SH)	- Trouble in Mark sensor → ? Check if the sensor is connected well or not. ? Check if the sensor is adjusted well or not. (FILE NO 001) ? Check if it is label problem or not.
		ERROR CODE [065] >CUT I/O Error!	All models	- Trouble in cutting motor or cutting sensor → ? Upper knife moves 1~3 sec. and ERROR on display. Check the connection of cutting sensor. If not, exchange the cutting sensor. ? Upper knife doesn't move and ERROR on display. Exchange the cutting motor or drive board.
		STOP INPUT !! CHECK STOP INP!	All models	- Auto stop device is pressed down or shortage. → raise up the device and check shortage.
		(C)ACORD CTRL-OP AMC-T3KA VER1.7D	All models	- Bad connected ROM → Press ROM by hand or connect it again. (If not, change MB board)
		ERROR CODE[065] >CHECK CODE[003]	All models	- Change of FILE 003 in program by noise or mis-operation → Initialize the controller. ※ **How to Initialize**(programs to be initial) : press **SET**+**SHIFT/ESC** buttons and **RESET** button at the same time. (Press **RESET** later than other two keys.)
9	Operator feels electric current in touch of machine.		All models	- Connect the earth cord(green) to any bolt of backside of machine.
10	After exchange ROM, you should do initialize the controller, due to error message, if you cannot do initialization, please press "SHIFT/ESC' button to escape error message screen and then initialize the controller.			

Please contact following address for further information.

START®
International

4270 Airborn Dr.
Addison, TX 75001
972.248.1999 - info@startinternational.com
www.STARTinternational.com

Please do not disassemble / modify machine or its part without any permission.
If you disassemble / modify machine or its part, you cannot receive warranty/after-sales service.