

OPERATOR MANUAL

TBC50

www.STARTinternational.com
4270 Airborn Dr., Addison TX, 75001, +1 972.248.1999

Table of Contents

Specifications 03

Security 03

Safety Precautions 04

Features 05

Installation 06

Key Functions 07

How to Operate 08
- Loading the Material 08
- Programming a Single Cut 08
- Programming a Double Cut 09
- Programming a Triple Cut 11

Maintenance 13
- Blade Replacement 13
- Fuse Replacement 14

Technical/Customer Service/Returns 15

Warranty Policy 15

Freight 15

General 16

Basic Troubleshooting 17

TBC50 Parts List A: Drawing Feeding Module 18

TBC50 Parts List A: Feeding Module 19

TBC50 Parts B: Drawing Cutting Module 20

TBC50 Parts B: Cutting Module 21

TBC50 Parts C: Drawing Other Parts 22

TBC50 Parts C: Other Parts 23

Wiring Diagram 24

Conformity Declarations 25

Specifications

Model Name:	TBC50, Belt Loop Cutter (TBC50-2 for 220V)
Main Materials Cut:	Belt Loop, String, Tube, Velcro Tape
Cutting Blade:	Cold
Power Supply:	AC 110V 60Hz or 220V 50Hz
Cutting Width Range:	4.33" (1 ~ 110mm)
Cutting Length Range:	.04" to 394" (1 ~ 9999mm)
Throughput 2" (50 mm):	120~ 140 cuts/ min.
Machine Size & Weight:	33.5"(L) x 121.6"(W) x 18.9"(H) (850mm x 320mm x 380mm) 39lbs. (17.5kgs)
Box Size & Weight:	21.25"(L) x 16.9"(W) x 13.4"(H) (540mm x 430mm x 340mm) 49lbs. (22.1kgs)

Before operating the equipment, read and familiarize yourself with the following operating and safety instructions. SAVE THESE INSTRUCTIONS FOR FUTURE REFERENCE. Save the original box and packaging. Use this packaging to ship the equipment if repairs are needed.

Security

For enhanced security, operators must undergo comprehensive training covering machine inspection, maintenance, and operation. Emphasis should be on proper setup, work area safety, and vigilant detection of broken or damaged parts. Approved methods for equipment cleaning and parts replacement must be thoroughly understood. Prior to operation, operators must be trained on all safety features, including the use of proper personal protective equipment such as hand, eye, and face protection. Loose-fitting clothing is strictly prohibited.





The machine incorporates key precautionary features, including:

1. Existence Detector: A metal comb automatically halts and shuts off the machine if material runs out during operation.
2. Emergency Stop Button: Pressing this button immediately stops and shuts off the machine.

To resume operation, operators must lift and turn the emergency button.

3. Knife Safety Guard. A metal cover installed over the cutting blades to prevent blade exposure or accidental injury. The safety guard will not fully prevent injury if fingers are deliberately maneuvered under the cover.



Safety Precautions

To ensure safe operation, read the following statements and understand their meaning. This manual contains safety precautions which are explained below. Please read carefully.



WARNING
Warning is used to indicate the presence of a hazard that will or can cause severe personal injury or death.



CAUTION
Caution is used to indicate the presence of a hazard that will or can cause minor or major personal injury if the caution is ignored.

NOTICE: Notice is used to note information that is important but not hazard-related.



WARNING
Severe injury can occur if this equipment is not used properly

To reduce risk of injury or damage to the machine:

- Keep out of reach of children.
- Do not turn equipment on unless all guards are in place.
- Do not feed material by hand: always allow the machine to forward the material.
- Machine must be connected to a properly grounded electrical supply matching the nameplate rating.
- Always unplug machine before cleaning.
- Do not place hands or any object in the cutting zone when blade is active.
- Keep machine away from water; avoid water jets during cleaning.
- Machine should only be used in a flat, leveled position.
- Do not operate unattended.
- Install or locate this machine only in accordance with the provided installation instructions.
- Do not operate this machine if it has a damaged cord or a plug, if it is not working properly or if it has been damaged or dropped.
- Do not immerse the cord or plug in water. Keep the cord away from heated surfaces.
- Do not use an extension cord with this machine. Do not plug this machine into a power strip or multi-outlet power cord.
- Do not spray controls or outside of machine with liquids or cleaning agents.
- Keep machine and power cord away from open flames, electric burners or excessive heat.

Features

Your START International TBC50 Heavy-Duty Non-Adhesive Material Cutter automatically dispenses, measures, and cuts non-adhesive materials.

- Ideal for heavy production to cut Tubing, Sleeving, Nomex®, Velcro®, etc.
- Cuts up-to 4.33" (110mm) wide material or multiple rolls.
- Programmable cuts as small as 1mm.
- Adjustable cutting speeds for faster production or slower for training.
- High-speed; can cut up to 140 pieces per minute at 2" (50mm) in length
- All electric microprocessor controlled
- Automatic shut-off feature stops automatically if material runs out during operation
- Easy to use; set length, quantity and feed speed then press start! Pressure roller on the feed roller is adjustable for thin or smooth materials.
- Accuracy by means of stepper motor
- Cutter safety guard included
- No tooling required to cut different materials. Cutting blade is made of high-speed steel (HSS)

Installation

WARNING
Severe injury can occur if this equipment is not used properly

Install cutting guard - Before starting any operation, install the protective guard to ensure operators' safety. There are 4 screws to secure the guard.





Without Safety Guard



Safety Guard Installed

Mount roller hanger - Attach the roller hanger using a 4mm-wrench



Key Functions



Current length on display will reset to "0".



All of current length and current QTY on display will reset to "0"



All of current length and current QTY on display will reset to "0"



Cuts an additional one.



Restoring to normal condition in ERROR (red LED) and inputting parameter or program.





To move the roller for mounting the material on the machine; Key 4 moves the material foward and Key 6 moves the material backward.



Speed increase
(Current speed is displayed in the top left of the LCD screen with a "%" symbol.
Normal speed: 50%; Maximum speed: 100%) *



Speed decrease
(Current speed is displayed in the top left of the LCD screen with a "%" symbol.
Normal speed: 50%, Minimum speed: 0%) *

**You can Increase/Decrease the speed anytime, whether the machine is on or off. The set speed stays the same after pressing RESET or powering off/on.*



To insert a new program during programs already inputted and running



To delete (or backspace) the wrong input while programing



Function used to create cutting programs

How to Operate TBC50

How to load the material into the TBC50:

NOTICE: Make sure Safety Guard is installed correctly.

1. Pull material under, through and between metal guides.

2. Continue to pass the material under the Existence Detector (looks like a metal comb) and across the machine.

3. Direct the material through and between the metal guides and toward the feeding roller

4. Raise the lever to pass material through the spring loaded roller.

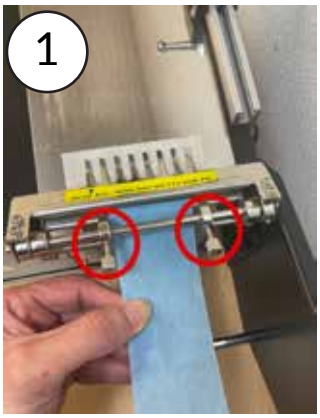

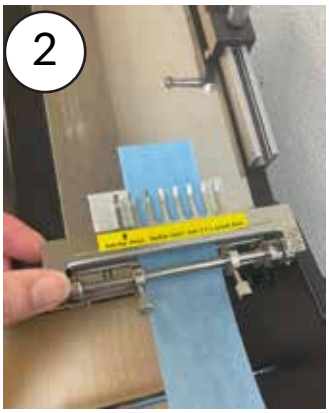

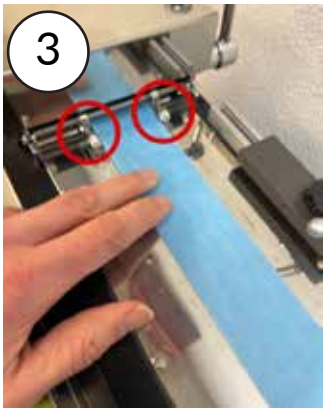

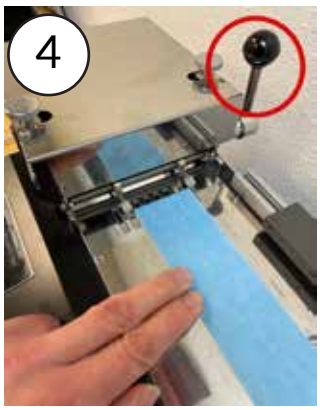



5. Feed the material manually through the roller (or press Key 4 to automatically feed) until material is visible or past the blades.

The machine is now ready to be used.

How to Program the TBC50 for a Single, Double and Triple Cut (dependent on model)

For A Single Cutting:

For example, the below instructions will use the following:

Cutting Length:	70 mm
Cutting Quantity:	120 pieces

Turn on the Power

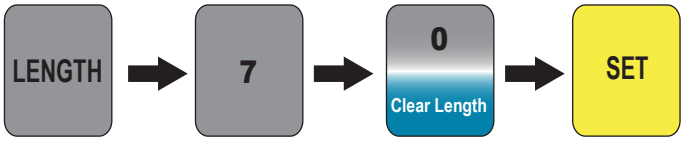

Set cutting length by pressing LENGTH, press the correct numbers for your length, press SET

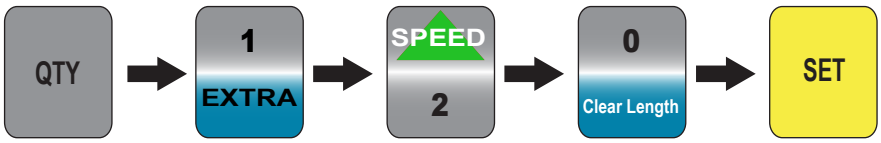

Set cutting quantity by pressing QTY, press the correct numbers for your quantity, press SET

On screen results should look like this:





Press START to begin

For Double Cutting:

1. Press SET and FILE buttons at same time. (press SET button first).

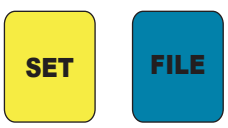


```
PROGRAM EDIT
>PASSWORD [     ]
```

2. Input password “77” and press SET button.




```
PROG-MODE NO [00]
000:M80:      78
```

3. Press KEY 6 button.




```
PROG-MODE NO [00]
001:L00:       0
```

4. Press INS button




```
STEP Insert   !!
001:   :
```

5. Input **98076** and press SET button




```
STEP Insert   !!
002:   :
```

6. Press SHIFT/ESC button




```
PROG-MODE NO [00]
002:L00:       0
```

7. Press KEY 6 button **5 times** and move to STEP 007




```
PROG-MODE NO [00]
007:M03:       0
```

8. Press INS button




```
STEP Insert   !!
007:   :
```

9. Input **98076** and press SET button




```
STEP Insert   !!
008:   :
```

10. Press SHIFT/ESC button




```
PROG-MODE NO [00]
008:M03:       0
```

11. Press SHIFT/ESC button and come out to work mode



12. Set the length and the quantity and start operation

For Triple Cutting:

1. Press SET and FILE buttons at same time. (press SET button first).

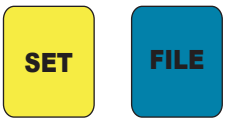


```
PROGRAM EDIT
>PASSWORD [     ]
```

2. Input password **"77"** and press SET button.




```
PROG-MODE NO [00]
000:M80:      76
```

3. Press KEY 6 button.




```
PROG-MODE NO [00]
001:L00:       0
```

4. Press INS button




```
STEP Insert    !!
001:   :
```

5. Input **98076** and press SET button




```
STEP Insert    !!
002:   :
```

6. Once again, input **98076** and press SET Button




```
STEP Insert    !!
002:   :
```

7. Press SHIFT/ESC button




```
PROG-MODE NO [00]
002:L00:       0
```

8. Press KEY 6 button **5 times** and move to STEP 007




```
PROG-MODE NO [00]
007:M03:       0
```

9. Press INS button




```
STEP Insert    !!
007:   :
```

10. Input **98076** and press SET button




```
STEP Insert    !!
008:   :
```

11. Once again, Input 98076 and press SET Button



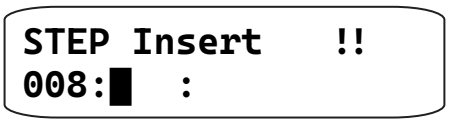

12. Press SHIFT/ESC button



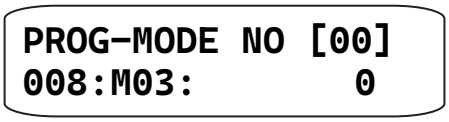

13. Press SHIFT/ESC button and come out to work mode



14. Set the length and the quantity and start operation

For system initialization (all programs to original), pressSHIFT/ESC and SET and RESET button at the same time (Press later than other two keys).



Maintenance

WARNING
Severe injury can occur if this equipment is not used properly

WARNING
Cut and Amputation Hazard
The blade on this machine is extremely sharp. Severe injury can occur if care is not used when cleaning or replacing the blade. Only trained personnel should operate equipment or perform maintenance. To reduce the risk of injury, the use of a cut resistant glove(s) is recommended.

WARNING
Electrical Shock Hazard
Keep water and other liquids from entering the inside of the equipment. Liquid inside the equipment could cause an electrical shock. Do not spray water or cleaning products. Liquid could contact the electrical components and cause a short circuit or an electrical shock.

Blade Replacement

1. Turn off/ unplug machine; unscrew 4 bolts on safety cap and take off the cap
2. Take off stopper
3. Unscrew 2 control bolts of upper blade using a 2.5mm-wrench, do not take them off.
4. Unscrew 4 fixing bolts using a 4mm-wrench and take off upper blade.
5. Unscrew 3 fixing bolts of lower blade using a 4mm-wrench and take off lower blade.

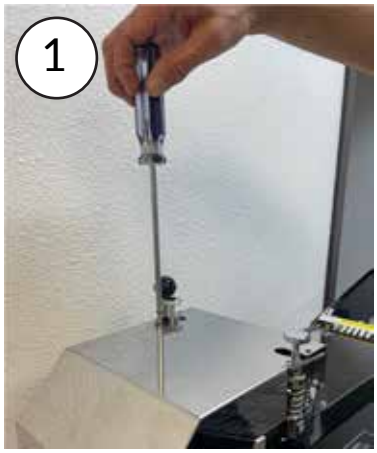

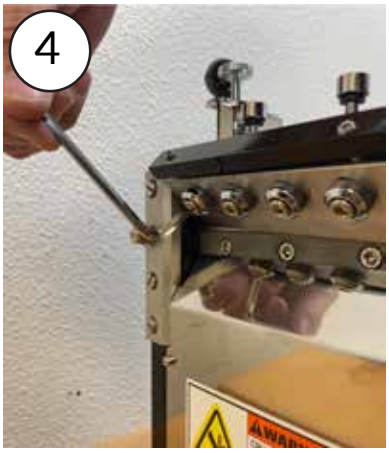



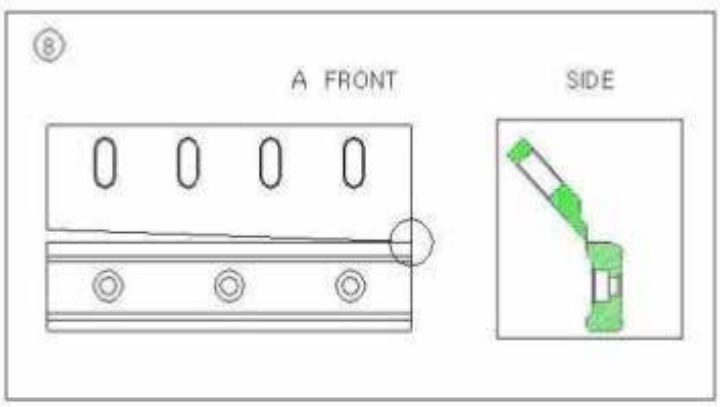

6. Install new lower blade and fasten it firmly.

7. Move up upper blade frame and install new upper blade and fix it but don't fasten it firmly.

8. By soft touch of M/CUT button, if right bottom of upper blade contacts top of lower blade, screw the control bolt of upper blade slightly.



9. Test with paper or tissue (at right, middle, left of blade) by M/CUT button and adjust control bolt of upper blade firmly.

10. If cutting is normal, fasten the control bolts of upper blade firmly.

11. Attach stopper again.

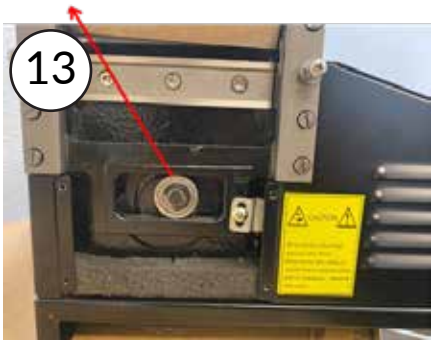

12. Whenever required, unfasten the 4 bolts of front cover and open the cover to adjust lower blade.

13. Turn the crank clockwise with 3mm wrench for adjusting the cutting blade manually.

Fuse Replacement

Take off the power plug and exchange as indicate







Technical, Customer Service & Returns

For technical support or customer support, please visit www.startinternational.com for details, instructional videos, or guides. Please call START Customer Support at +1 (972) 248-1999, Monday-Friday; 9AM-5PM CST.

If a malfunction is detected take these steps to resolve any technical issue:

1. Please contact your customer service representative to describe the nature of your problem and to determine if your product is covered under warranty. Do not attempt to disassemble or repair the machine prior to talking to a representative or the warranty will be void.
2. Provide the product number, serial number and brief discription of the issue.
3. Submit pictures and short videos of the issue (over 90% of most problems are resolved with a video-call).
4. However, if it is **determined that your product needs to be submitted for repair an RMA number will be assigned. Shipping a product to us without an RMA # may delay your service.**
5. Please make sure to package your product properly with an excess amount of packaging material in order not to expose your product to shipping damage. Shipping damage is not covered under warranty.
6. Upon receiving the machine our START technician after 5 business days will send you feedback or schedule a videoconference. Once the repair is made and the machine has been sent back, after 2 weeks the work ticket will close, if no issues are reported.

Warranty Policy

START International warrants FOR 180 DAYS all parts against defects in design, materials and workmanship; knives/ blades and other consumable items are excluded.

Freight

All warranty serviced products must be returned to START International prepaid. START International will return the product back to the customer via preferred carrier at START International's expense. (Premium Freight service (FedEx Priority, UPS Red, etc.) is offered at the customer's expense.)

General

Our sole obligation under this warranty is limited to repair, replacement or credit of the purchase price, at our option, for the machines listed above, which do not perform properly the function for which they were designed.

Warranty repair is contingent upon our examination and determination that alleged defects have not been caused by misuse, abuse, improper installation or application, repair, alteration, accident or neglect in use, storage, transportation, or handling.
The above warranty and remedy constitutes START International sole liability hereunder and are in lieu and exclusive of all other warranties and remedies expressed, implied or statutory, including, but not limited to, those of merchantability and fitness for a particular purpose.

START International reserves the right to revise this policy at any time.

Basic Troubleshooting

Ask	Troubles		Appicable Mode	Causes & Measures
1	No Power		All models	• Check electric cord is properly connected. • Check the fuse does not blow out. • Check emergency stop button is not engaged.
2	Power is on, but not working	Feeding roller does not move	All models	• Check for any alien material inserted in roller. • If current length on display changes, exchange drive board. • If current length on display does not change, exchange Control board (MB).
		Knife does not work	All models	• Check pressure plates of upper knife are not tightened too hard
		LCD display does not work	All models	• Open cover, check connection between Operation & Main Boards
		All functions do not work	All models	• Check auto-stop sensor does not lie down. If so, raise it up
3	Material is not cut.		Hot cutter (H, LH, SH, HX)	• Check temperature goes up to the desired/ set temperature. • Check blades are even (parallel).
4	Material is cut onesidedly		All models	• Check for damaged knives or wear. • Press the M/CUT button to bring both knives together and verify if they are evenly aligned. • Adjust the pressure bolts of the upper knife.
5	Cut-length is different from set-length.		All models	• Test cutting after loosening material from the reel by hand or using feeding device.
6	It cuts before the cutting line of labels.		Label cutter (S, SH)	• Move the sensor towards the knife until the difference is corrected.
7	It cuts after the cutting line of labels.		Label cutter (S, SH)	• Move the sensor away from the knife side until the difference is corrected.
8	ERROR on LCD & LED	ERROR CODE [064] >Sensor Check Error	Label cutter (S, SH)	• Check the sensor is properly connected. • Check the sensor is properly adjusted (FILE # 01). • Check it isnot a label problem.
		ERROR CODE [065] >CUT I/O Error!	All models	• Upper blade moves for 1 to 3 seconds and ERROR on display. - Check the connection of counting sensor. - Exchange the counting sensor. • Upper blade doesn't move and ERROR on display. - Exchange the cutting motor or drive board.
		STOP INPUT !!CHECK STOP INP!	All models	• Auto-stop comb is pressed down onto sensor or material shortage → raise up the auto-stop comb and check for material shortage.
		(C)ACORD CTRL-OP AMC-T3KA VER1.7D	All models	• Bad connected ROM → Press ROM by hand or connect it again. • If not, change the main board
		ERROR CODE [065] >CHECK CODE [003]	All models	• If using FILE 003 in program and there is noise or mis-operation → Initialize the controller: press SET+SHIFT/ESC buttons and RESET button at the same time. • Press RESET immediately after
9	Operator feels electric current when touching the machine.		All models	• Ground the machine by connecting the ground cord (green) to any bolt of backside of machine.
10	After replacing the ROM, initialize the controller. If an error message appears and initialization fails, press the "SHIFT/ESC" button to exit the error message screen, then initialize the controller again.			

TBC50 PARTS LIST A:

DRAWING FEEDING MODULE

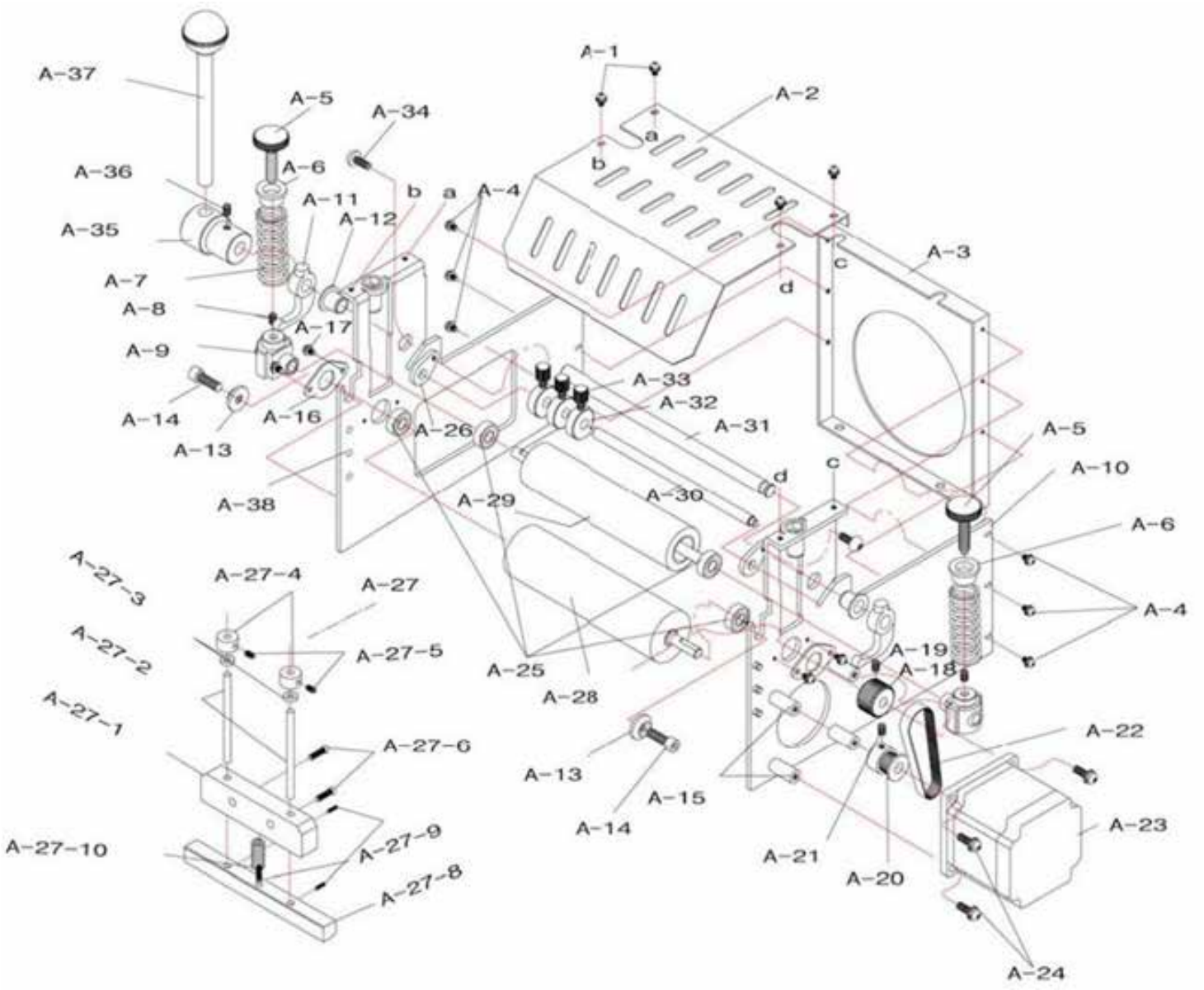

TBC50 PARTS LIST A:
FEEDING MODULE

PART NO	DESCRIPTION	PART NO	DESCRIPTION 2
A - 1	Clamping Bolt	**A - 26**	Guide-clamping Bracket
A - 2	Knife Safety Cover	**A - 27**	Stopper Set
A - 3	Space Plate of Roller Bracket	**A - 27-1**	Stopper Bracket
A - 4	Clamping Bolt	**A - 27-2**	Press Stopper Shaf
A - 5	Pressure-control Bolt	**A - 27-3**	Rubber Ring
A - 6	Pressure-control Spring Cover	**A - 27-4**	Clamming Ring
A - 7	Pressure-control Spring	**A - 27-5**	Clamping Bolt
A - 8	Detent Screw	**A - 27-6**	Clamping Bolt
A - 9	Slide Block of Upper Roller	**A - 27-7**	Clamping Bolt
A - 10	Right Roller Bracket	**A - 27-8**	Stopper
A - 11	Slide Lever	**A - 27-9**	Spring Clamping Bolt
A - 12	Oilless	**A - 27-10**	Spring
A - 13	Clamping Washer	**A - 28**	Lower Roller
A - 14	Wrench Bolt	**A - 29**	Upper Roller
A - 15	Tie Bar of Stepping Motor	**A - 30**	Front-guide Ring
A - 16	Bearing Cover	**A - 31**	Lever Shaft
A - 17	Clamping Bolt	**A - 32**	Guide Ring
A - 18	Feed-timing Gear(MXL30T)	**A - 33**	Knob Bolt of Guide Ring
A - 19	Detent Screw	**A - 34**	Round Screw
A - 20	Drive-timing Gear(MXL20T)	**A - 35**	Lever
A - 21	Detent Screw	**A - 36**	Detent Screw
A - 22	Timing Belt(MXL75)	**A - 37**	Lever
A - 23	Stepping Motor	**A - 38**	Left Roller Bracket
A - 24	Clamping Bolt		
A - 25	Ball Bearing		

TBC50 PARTS B:
DRAWING CUTTING MODULE

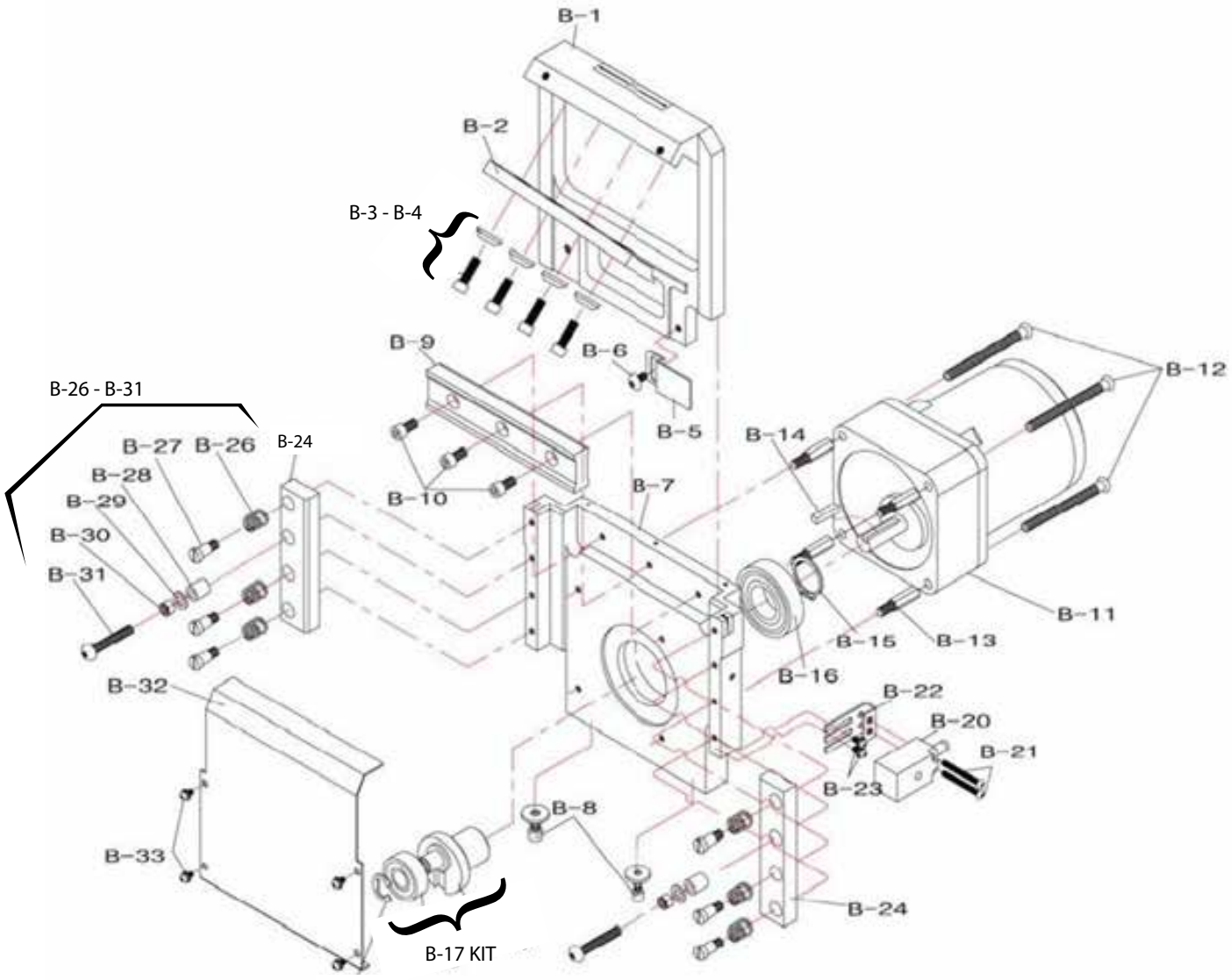

TBC50 PARTS B:

DRAWING CUTTING MODULE

PART NO	DESCRIPTION	PART NO	DESCRIPTION 2
B- 1	Upper Knife Case	**B-16**	Ball Bearing
B- 2	Upper Knife	**B-17 KIT**	Crank Bundle w/Hardware
B-3 - B-4	Wrench Bolt & Washer	**B-20**	Counting Sensor
B-5	Counting-senor Bracket	**B-21**	Clamping Bolt
B-6	Clamping Bolt	**B-22**	Clamping Bracket
B-7	Lower Knife Case	**B-23**	Clamping Bolt
B-8	Wrench Bolt	**B-24**	Right / Left Pressure Plate
B-9	Lower Knife	**B-26 - B-31**	Pressure Plate Hardware
B-10	Wrench Bolt	**B-32**	Front Cover
B-11	Motor + Reduction Gear	**B-33**	Clamping Bolt/M3*6
B-12	Clamping Bolt	**B-34**	Roller Spacer
B-13	Motor Supporter	**B-35**	Flat Bolt/M3*6
B-14	Motor Key		

TBC50 PARTS C:

DRAWING OTHER PARTS

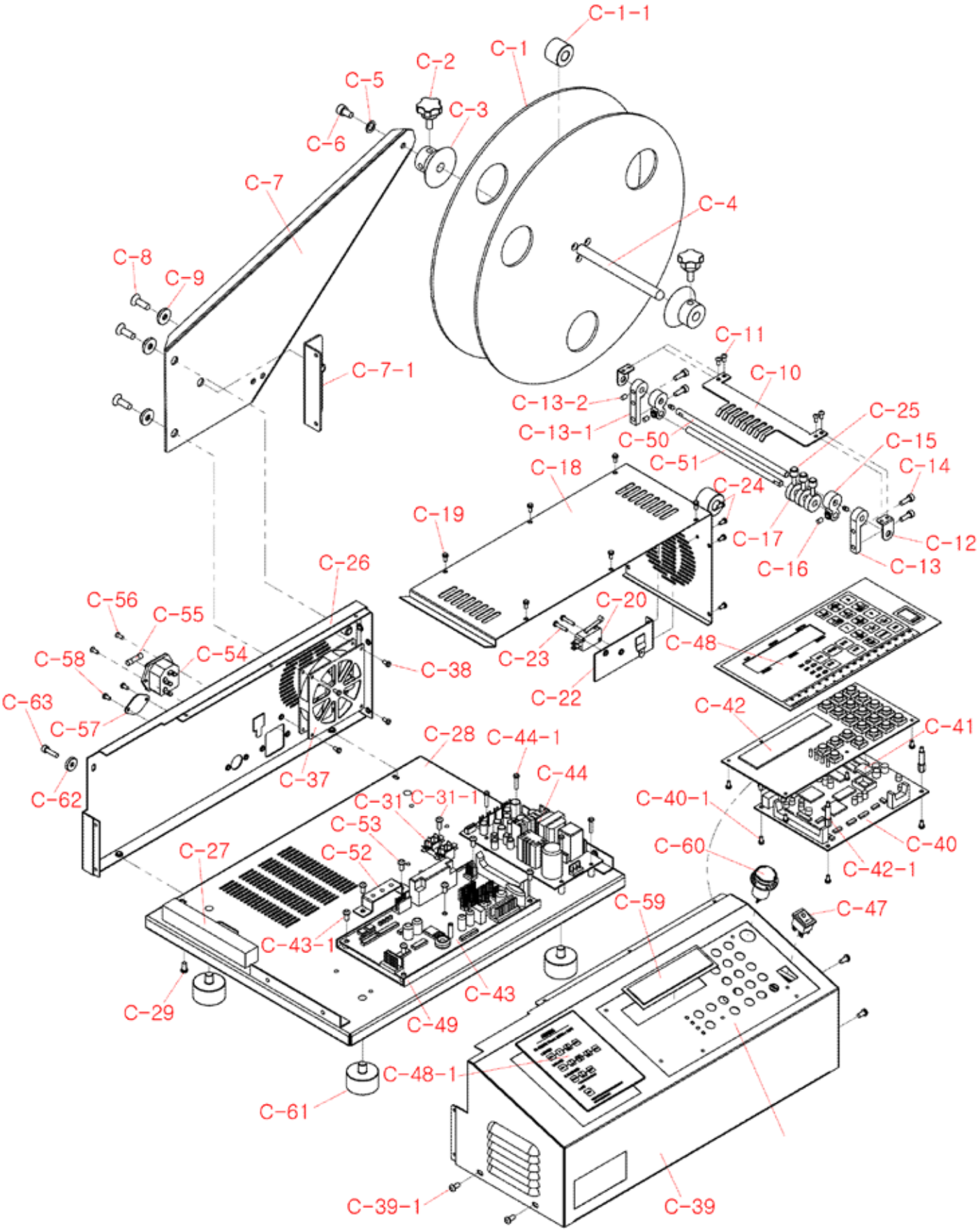

TBC50 PARTS C:
DRAWING OTHER PARTS

PART NO	DESCRIPTION	PART NO	DESCRIPTION
C-1	Roll-hanger Wheel	**C-37**	Cooling Fan
C-1-1	Core	**C-38**	Round Bolt/M3*6
C-2	Clamping Bolt of Holder	**C-39**	Control Cover
C-3	Holder	**C-39-1**	Clamping Bolt/M4*8
C-4	Roll-hanger Shaft	**C-40**	Control Circuit Board(MB)
C-5	Spring Washer/Φ6	**C-40-1**	Clamping Bolt/M3*6
C-6	Wrench Bolt/M6*10	**C-41**	ROM
C-7	Roll-hanger	**C-42**	Operation Circuit Board(OP)
C-7-1	Reel hanger bracket	**C-42-1**	OP board support
C-8	Flat bolt/M6*15	**C-43**	Drive Circuit Board(DR)
C-9	Neck Washer/M6	**C-43-1**	Clamping Bolt/M4*8
C-10	Existence Detector	**C-44**	SMPS(Power Supply)
C-11	Clamping Bolt/M3*6	**C-44-1**	Clamping Bolt/M3*15
C-12	Clamping Bracket	**C-45**	Power Cord
C-13	Rear Guide-pin Bracket-1	**C-47**	Power Switch
C-13-1	Rear Guide-pin Bracket-2	**C-48**	Urethane Panel
C-13-2	Socket set screw/M4*6	**C-48-1**	User Manual
C-14	Wrench Bolt/M4*12	**C-49**	Heat sink
C-15	Rear Tension-guide Block	**C-50**	Guide Pin-1
C-16	Socket set screw/M4*4	**C-51**	Guide Pin-3
C-17	Guide Ring	**C-52**	Earth plate
C-18	Upper Guide Plate	**C-53**	Clamping Bolt/M4*8
C-19	Clamping Bolt/M3*6	**C-54**	Power Socket
C-20	Micro Limit Switch	**C-55**	Fuse
C-22	Limit Switch Bracket	**C-56**	Flat bolt/M3*6
C-23	Round Bolt/M3*6	**C-57**	Cover
C-24	Clamping Bolt/M3*6	**C-58**	Clamping Bolt/M3*6
C-25	Knob Bolt	**C-59**	Display cover
C-26	Left Cover	**C-60**	Emergency Switch
C-27	Sponge	**C-60-1**	Emergency Switch Plate
C-28	Base	**C-61**	Rubber foot
C-29	Clamping Bolt/M4*8	**C-62**	Neck Washer/M4
C-31	Terminal	**C-63**	Wrench Bolt/M4*15
C-31-1	Clamping Bolt/M4*10		

WIRING DIAGRAM

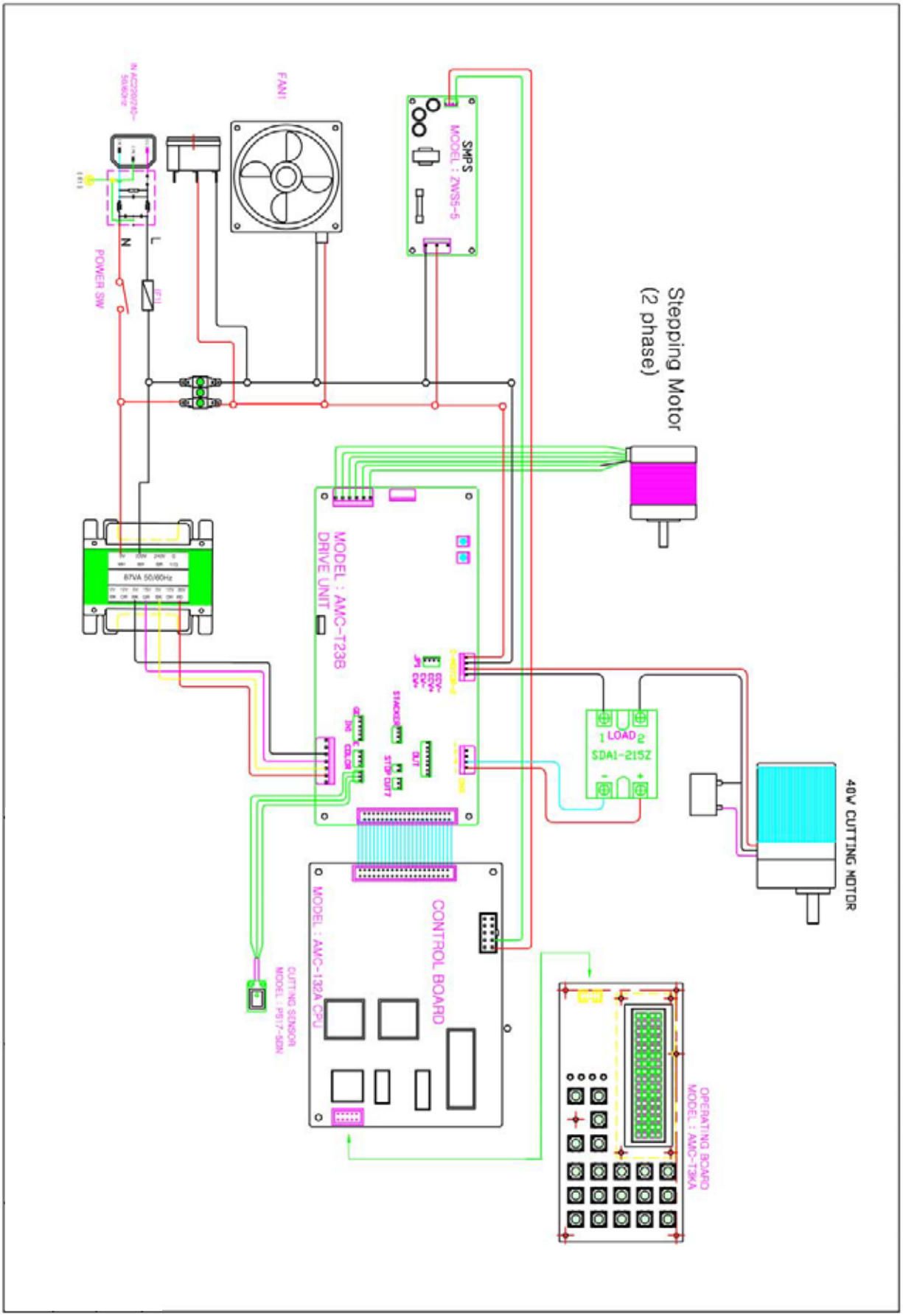

EU CONFORMITY DECLARATIONS

Scan the QR code or click on it to download the Declaration of Conformity

START International shall not be held liable for any unintentional errors, omissions, or inaccuracies contained within this instruction manual.

4270 Airborn Dr.
Addison TX, 75001

+1 972.248.1999

www.STARTinternational.com



OPERATOR MANUAL

TBC50S

www.STARTinternational.com
4270 Airborn Dr., Addison TX, 75001, +1 972.248.1999

Table of Contents

Specifications 03

Security 03

Safety Precautions 04

Features 05

Installation 06

Key Functions 07

How to Operate 08
- Loading the Material 08
- How to use the Sensor 09

Maintenance 12
- Blade Replacement 12
- Fuse Replacement 13

Technical/Customer Service/Returns 14

Warranty Policy 14

Freight 14

General 15

Basic Troubleshooting 16

TBC50 Parts List A: Drawing Feeding Module 17

TBC50 Parts List A: Feeding Module 18

TBC50 Parts B: Drawing Cutting Module 19

TBC50 Parts B: Cutting Module 20

TBC50 Parts C: Drawing Other Parts 21

TBC50 Parts C: Other Parts 22

Wiring Diagram 23

Conformity Declarations All 24

Specifications

Model Name:	TBC50S Belt Loop Cutter with Sensor (TBC50S-2 for 220V)
Main Materials Cut:	Labels (fabric, plastic, paper, metal)
Cutting Blade:	Cold
Power Supply:	AC 110V 60Hz or 220V 50Hz
Cutting Width Range:	4.33” (1 ~ 110mm)
Cutting Length Range:	.04” to 394” (1 ~ 9999mm)
Throughput 2“ (50 mm):	120~ 140 cuts/ min.
Machine Size & Weight:	33.5”(L) x 121.6”(W) x 18.9”(H) (850mm x 320mm x 380mm) 39lbs. (17.5kgs)
Box Size & Weight:	21.25”(L) x 16.9”(W) x 13.4”(H) (540mm x 430mm x 340mm) 49lbs. (22.1kgs)

Before operating the equipment, read and familiarize yourself with the following operating and safety instructions. SAVE THESE INSTRUCTIONS FOR FUTURE REFERENCE. Save the original box and packaging. Use this packaging to ship the equipment if repairs are needed.

Security

For enhanced security, operators must undergo comprehensive training covering machine inspection, maintenance, and operation. Emphasis should be on proper setup, work area safety, and vigilant detection of broken or damaged parts. Approved methods for equipment cleaning and parts replacement must be thoroughly understood. Prior to operation, operators must be trained on all safety features, including the use of proper personal protective equipment such as hand, eye, and face protection. Loose-fitting clothing is strictly prohibited.



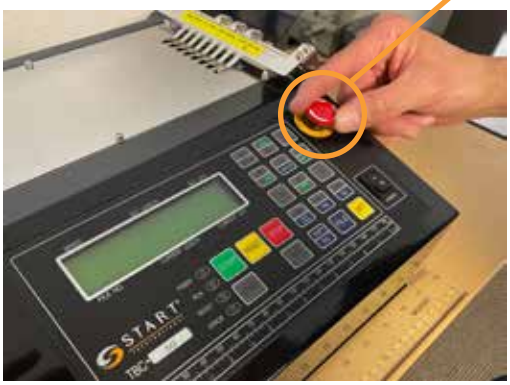

The machine incorporates key precautionary features, including:

1. Existence Detector: A metal comb automatically halts and shuts off the machine if material runs out during operation.
2. Emergency Stop Button: Pressing this button immediately stops and shuts off the machine.
To resume operation, operators must lift and turn the emergency button.
3. Knife Safety Guard. A metal cover installed over the cutting blades to prevent blade exposure or accidental injury. The safety guard will not fully prevent injury if fingers are deliberately maneuvered under the cover.



Safety Precautions

To ensure safe operation, read the following statements and understand their meaning. This manual contains safety precautions which are explained below. Please read carefully.



WARNING
Warning is used to indicate the presence of a hazard that will or can cause severe personal injury or death.



CAUTION
Caution is used to indicate the presence of a hazard that will or can cause minor or major personal injury if the caution is ignored.

NOTICE: Notice is used to note information that is important but not hazard-related.



WARNING
Severe injury can occur if this equipment is not used properly

To reduce risk of injury or damage to the machine:

- Keep out of reach of children.
- Do not turn equipment on unless all guards are in place.
- Do not feed material by hand: always allow the machine to forward the material.
- Machine must be connected to a properly grounded electrical supply matching the nameplate rating.
- Always unplug machine before cleaning.
- Do not place hands or any object in the cutting zone when blade is active.
- Keep machine away from water; avoid water jets during cleaning.
- Machine should only be used in a flat, leveled position.
- Do not operate unattended.
- Install or locate this machine only in accordance with the provided installation instructions.
- Do not operate this machine if it has a damaged cord or a plug, if it is not working properly or if it has been damaged or dropped.
- Do not immerse the cord or plug in water. Keep the cord away from heated surfaces.
- Do not use an extension cord with this machine. Do not plug this machine into a power strip or multi-outlet power cord.
- Do not spray controls or outside of machine with liquids or cleaning agents.
- Keep machine and power cord away from open flames, electric burners or excessive heat.

Features

Your START International TBC50S Heavy-Duty Non-Adhesive Material Cutter automatically dispenses, measures, and cuts non-adhesive materials.

- Ideal for heavy production to cut labels (fabric, plastic, paper, metal).
- Cuts up-to 4.33” (110mm) wide material or multiple rolls.
- Programmable cuts as small as 1mm.
- Adjustable cutting speeds for faster production or slower for training.
- High-speed; can cut up to 140 pieces per minute at 2” (50mm) in length
- All electric microprocessor controlled
- Automatic shut-off feature stops automatically if material runs out during operation
- Easy to use; set length, quantity and feed speed then press start! Pressure roller on the feed roller is adjustable for thin or smooth materials.
- Accuracy by means of stepper motor and photo-sensor
- Cutter safety guard included
- No tooling required to cut different materials.
- Cutting blade is made of high-speed steel (HSS)

Installation

WARNING
Severe injury can occur if this equipment is not used properly

Install Cutting Guard: Before starting any operation, install the protective guard to ensure operators' safety. There are 4 screws to secure the guard.



Without Safety Guard



Safety Guard Installed

Mount Roller Hanger: Attach the roller hanger using a 4mm-wrench



Installing the Sensor: Mount the sensor on the guide-rail and connect the jack of sensor into the connector of machine downside.



Sensor



Key Functions



Current length on display will reset to "0".



All of current length and current QTY on display will reset to "0"



All of current length and current QTY on display will reset to "0"



Cuts an additional one.



Restoring to normal condition in ERROR (red LED) and inputting parameter or program.





To move the roller for mounting the material on the machine; Key 4 moves the material foward and Key 6 moves the material backward.



Speed up (The current speed appears on the left-upside of LCD display with "%". Normal speed : 50%, Maximum speed : 100%)
* Speed up is possible at any time (operation or stop) and set-speed will not be changed even if you press RESET button or power off & on.



Speed down (The current speed appears on the left-upside of LCD display with "%". Normal speed : 50%, Minimum speed : 0%)
* Speed down is possible at any time (operation or stop) and set-speed will not be changed even if you press RESET button or power off & on.



To insert a new program during programs already inputted and running



To delete (or backspace) the wrong input while programing



Function used to create cutting programs

How to Operate TBC50S

How to load the material into the TBC50S:

NOTICE: Make sure Safety Guard is installed correctly.

1. Pull material under, through and between metal guides.

2. Continue to pass the material under the Existence Detector (looks like a metal comb) and across the machine.

3. Direct the material through and between the metal guides and toward the feeding roller

4. Raise the lever to pass material through the spring loaded roller.

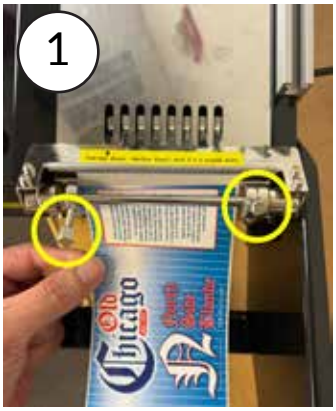



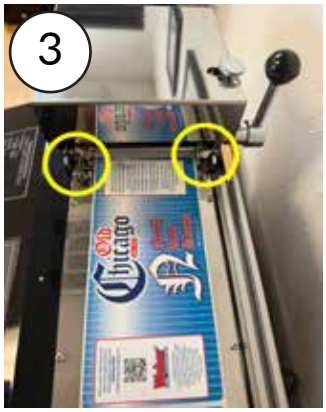

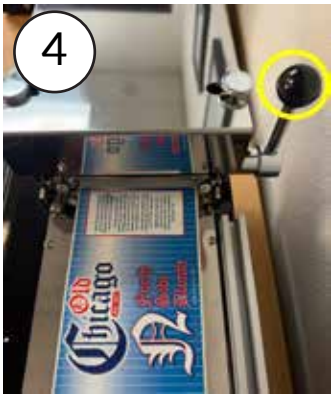

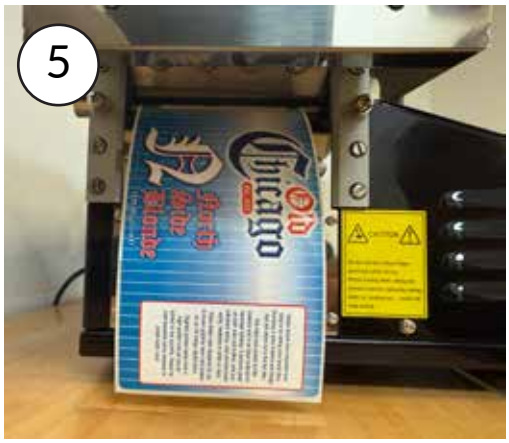

5. Feed the material manually through the roller (or press Key 4 to automatically feed) until material is visible or past the blades.

The machine is now ready to be used.

How to Operate TBC50S

For example (Cutting length: 70mm, Cutting quantity: 120 pcs)

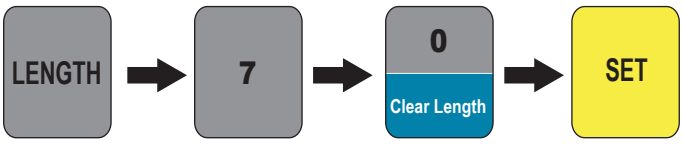

cutting length by pressing LENGTH, press the correct numbers for your length, press SET

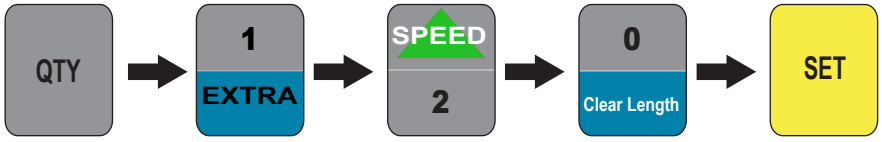

cutting quantity by pressing QTY, the correct numbers for your quantity, press SET

On screen results should look like this:



How to use the sensor

1. Measure the length of the label or material from where you want the blades to cut .



Set function. Sensor cutting: “1” ; Normal cutting: “0”

Sensor Cutting:



Normal Cutting:



2. Locate the cutting line of label on the lower knife blade precisely & move the sensor close to the knife.
(This step must go ahead of sensor adjustment).



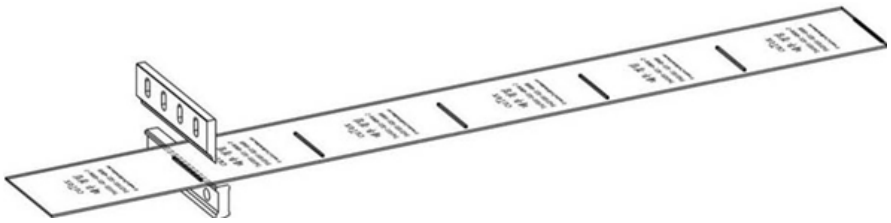



3. Sensor Adjustment:
Light sensor-beam on sensing point of label.
(Refer to “How to use the sensor” on the next page)

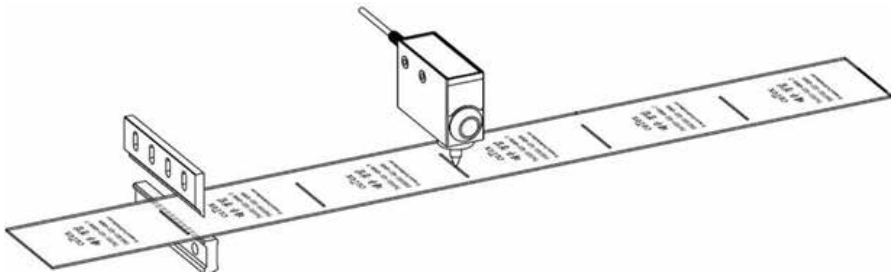

Press START button

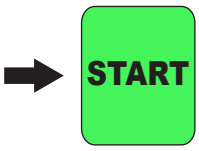

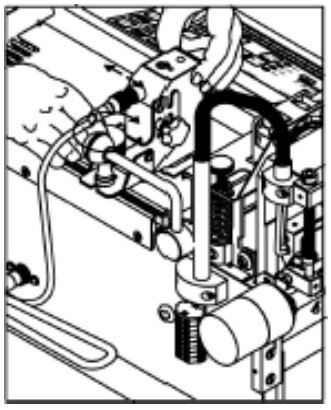

4. Adjust the sensor using the guide-control bolt to align the beam with the center of the marking point.

5. Align the light spot with the label's background to make the Q/T status indicator blink rapidly.

The "Delay" and "L/D" lamps will also blink.

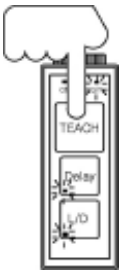

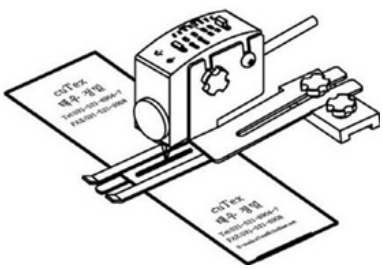

6. Position the light spot on the mark (cutting line, figure, or letters).
   Then, press the TEACH button to turn off the lamp delay and L/D, and stop the Q/T from blinking.



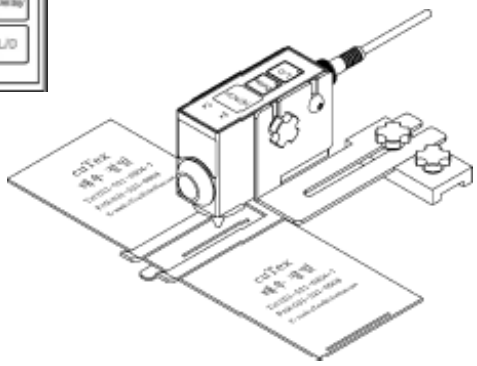

(This time, if Q/T continues to blink quickly, the contrast is insufficient, Set it again.)

NOTICE: Regardless whether the background is darker or lighter than the position of the light spot (the mark) set this mark first and then the background second.

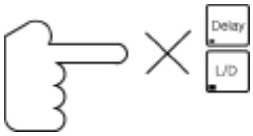

After configuring the sensor, avoid pressing the Delay or L/D button, as it may cause an error and alter the input data.

** In the case of objects with reflective or shiny surface, tilt sensor by 10° to 15° relative to surface.*

Check Points for cutting trouble

- **Check if sensor is adjusted after locating cutting line of label on the knife blade.**
- **Move the sensor forwards or backwards.**
- **Check sensitivity & height of the sensor.**
- **Check if the internal detector is up for elastic or down for non-elastic materials (including labels).**

Maintenance

WARNING
Severe injury can occur if this equipment is not used properly

WARNING
Cut and Amputation Hazard
The blade on this machine is extremely sharp. Severe injury can occur if care is not used when cleaning or replacing the blade. Only trained personnel should operate equipment or perform maintenance. To reduce the risk of injury, the use of a cut resistant glove(s) is recommended.

WARNING
Electrical Shock Hazard
Keep water and other liquids from entering the inside of the equipment. Liquid inside the equipment could cause an electrical shock. Do not spray water or cleaning products. Liquid could contact the electrical components and cause a short circuit or an electrical shock.

Blade Replacement

1. Turn off/ unplug machine; unscrew 4 bolts on safety cap and take off the cap
2. Take off stopper
3. Unscrew 2 control bolts of upper blade using a 2.5mm-wrench, do not take them off.
4. Unscrew 4 fixing bolts using a 4mm-wrench and take off upper blade.
5. Unscrew 3 fixing bolts of lower blade using a 4mm-wrench and take off lower blade.

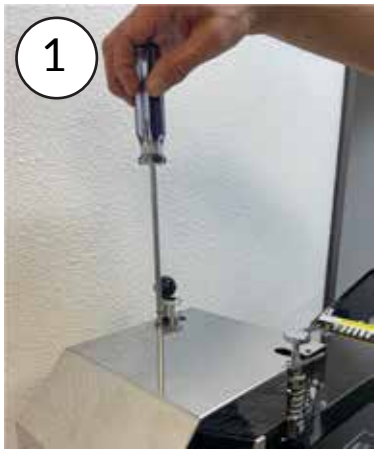

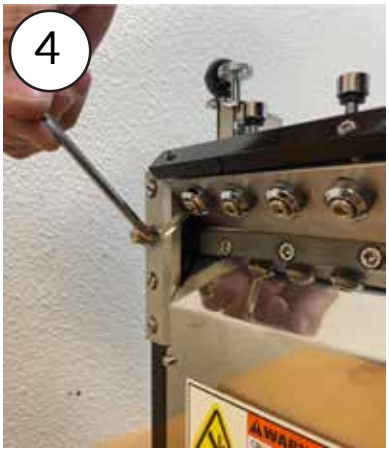



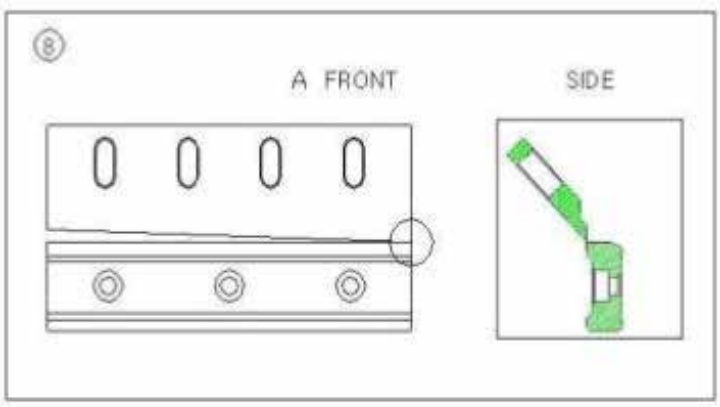

6. Install new lower blade and fasten it firmly.

7. Move up upper blade frame and install new upper blade and fix it but don't fasten it firmly.

8. By soft touch of M/CUT button, if right bottom of upper blade contacts top of lower blade, screw the control bolt of upper blade slightly.



9. Test with paper or tissue (at right, middle, left of blade) by M/CUT button and adjust control bolt of upper blade firmly.

10. If cutting is normal, fasten the control bolts of upper blade firmly.

11. Attach stopper again.

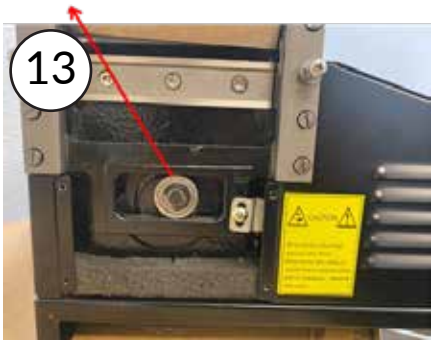

12. Whenever required, unfasten the 4 bolts of front cover and open the cover to adjust lower blade.

13. Turn the crank clockwise with 3mm wrench for adjusting the cutting blade manually.

Fuse Replacement

Take off the power plug and exchange as indicate







Technical, Customer Service & Returns

For technical support or customer support, please visit www.startinternational.com for details, instructional videos, or guides. Please call START Customer Support at +1 (972) 248-1999, Monday-Friday; 9AM-5PM CST.

If a malfunction is detected take these steps to resolve any technical issue:

1. Please contact your customer service representative to describe the nature of your problem and to determine if your product is covered under warranty. Do not attempt to disassemble or repair the machine prior to talking to a representative or the warranty will be void.
2. Provide the product number, serial number and brief discription of the issue.
3. Submit pictures and short videos of the issue (over 90% of most problems are resolved with a video-call).
4. However, if it is **determined that your product needs to be submitted for repair an RMA number will be assigned. Shipping a product to us without an RMA # may delay your service.**
5. Please make sure to package your product properly with an excess amount of packaging material in order not to expose your product to shipping damage. Shipping damage is not covered under warranty.
6. Upon receiving the machine our START technician after 5 business days will send you feedback or schedule a videoconference. Once the repair is made and the machine has been sent back, after 2 weeks the work ticket will close, if no issues are reported.

Warranty Policy

START International warrants FOR 180 DAYS all parts against defects in design, materials and workmanship; knives/ blades and other consumable items are excluded.

Freight

All warranty serviced products must be returned to START International prepaid. START International will return the product back to the customer via preferred carrier at START International's expense. (Premium Freight service (FedEx Priority, UPS Red, etc.) is offered at the customer's expense.)

General

Our sole obligation under this warranty is limited to repair, replacement or credit of the purchase price, at our option, for the machines listed above, which do not perform properly the function for which they were designed.

Warranty repair is contingent upon our examination and determination that alleged defects have not been caused by misuse, abuse, improper installation or application, repair, alteration, accident or neglect in use, storage, transportation, or handling.
The above warranty and remedy constitutes START International sole liability hereunder and are in lieu and exclusive of all other warranties and remedies expressed, implied or statutory, including, but not limited to, those of merchantability and fitness for a particular purpose.

START International reserves the right to revise this policy at any time.

Basic Troubleshooting

Ask	Troubles		Appicable Mode	Causes & Measures
1	No Power		All models	• Check electric cord is properly connected. • Check the fuse does not blow out. • Check emergency stop button is not engaged.
2	Power is on, but not working	Feeding roller does not move	All models	• Check for any alien material inserted in roller. • If current length on display changes, exchange drive board. • If current length on display does not change, exchange Control board (MB).
		Knife does not work	All models	• Check pressure plates of upper knife are not tightened too hard
		LCD display does not work	All models	• Open cover, check connection between Operation & Main Boards
		All functions do not work	All models	• Check auto-stop sensor does not lie down. If so, raise it up
3	Material is not cut.		Hot cutter (H, LH, SH, HX)	• Check temperature goes up to the desired/ set temperature. • Check blades are even (parallel).
4	Material is cut onesidedly		All models	• Check for damaged knives or wear. • Press the M/CUT button to bring both knives together and verify if they are evenly aligned. • Adjust the pressure bolts of the upper knife.
5	Cut-length is different from set-length.		All models	• Test cutting after loosening material from the reel by hand or using feeding device.
6	It cuts before the cutting line of labels.		Label cutter (S, SH)	• Move the sensor towards the knife until the difference is corrected.
7	It cuts after the cutting line of labels.		Label cutter (S, SH)	• Move the sensor away from the knife side until the difference is corrected.
8	ERROR on LCD & LED	ERROR CODE [064] >Sensor Check Error	Label cutter (S, SH)	• Check the sensor is properly connected. • Check the sensor is properly adjusted (FILE # 01). • Check it isnot a label problem.
		ERROR CODE [065] >CUT I/O Error!	All models	• Upper blade moves for 1 to 3 seconds and ERROR on display. - Check the connection of counting sensor. - Exchange the counting sensor. • Upper blade doesn't move and ERROR on display. - Exchange the cutting motor or drive board.
		STOP INPUT !!CHECK STOP INP!	All models	• Auto-stop comb is pressed down onto sensor or material shortage → raise up the auto-stop comb and check for material shortage.
		(C)ACORD CTRL-OP AMC-T3KA VER1.7D	All models	• Bad connected ROM → Press ROM by hand or connect it again. • If not, change the main board
		ERROR CODE [065] >CHECK CODE [003]	All models	• If using FILE 003 in program and there is noise or mis-operation → Initialize the controller: press SET＋SHIFT/ESC buttons and RESET button at the same time. • Press RESET immediately after
9	Operator feels electric current when touching the machine.		All models	• Ground the machine by connecting the ground cord (green) to any bolt of backside of machine.
10	After replacing the ROM, initialize the controller. If an error message appears and initialization fails, press the "SHIFT/ESC" button to exit the error message screen, then initialize the controller again.			

TBC50 PARTS LIST A:

DRAWING FEEDING MODULE

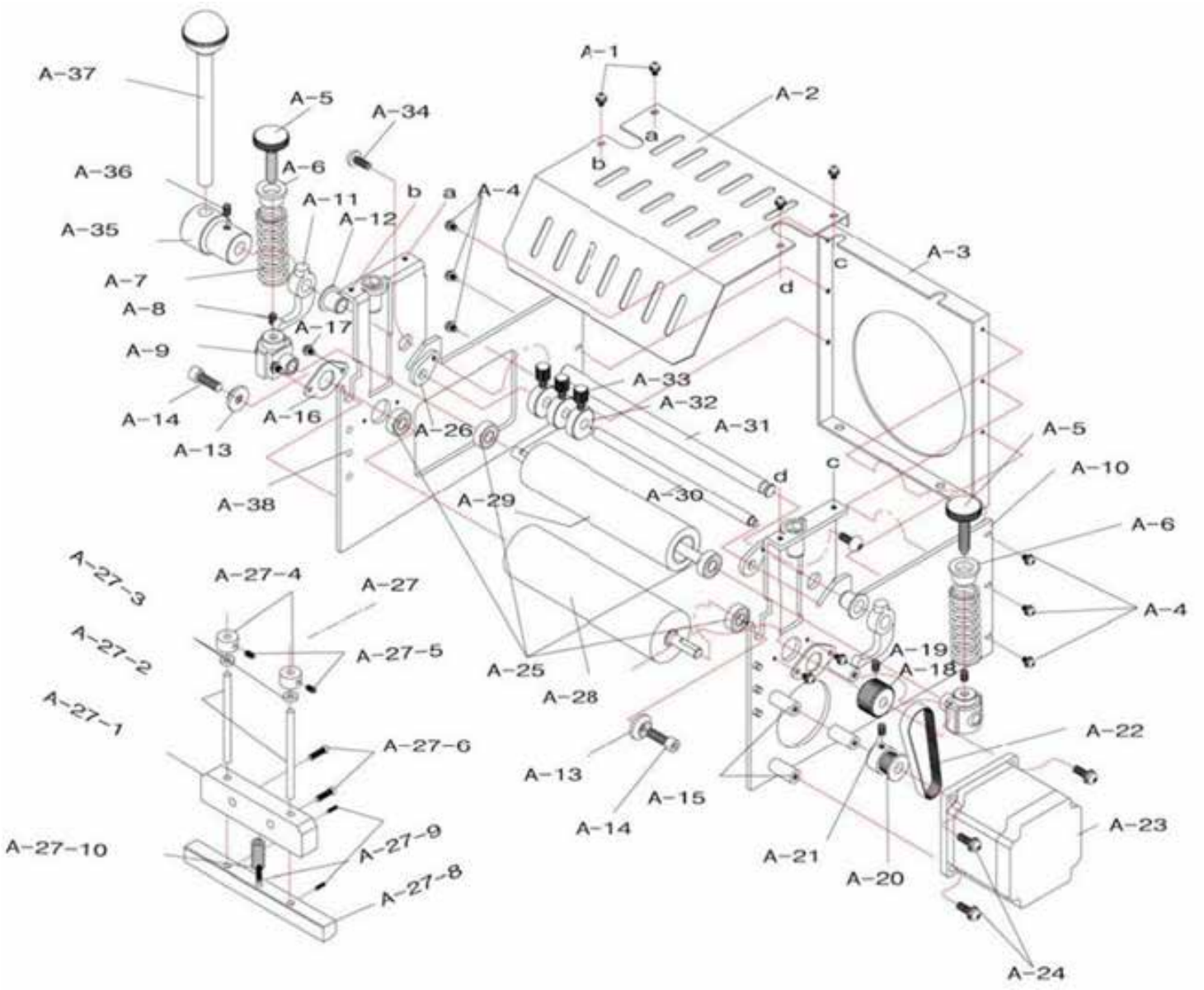

TBC50 PARTS LIST A:
FEEDING MODULE

PART NO	DESCRIPTION	PART NO	DESCRIPTION 2
A - 1	Clamping Bolt	**A - 26**	Guide-clamping Bracket
A - 2	Knife Safety Cover	**A - 27**	Stopper Set
A - 3	Space Plate of Roller Bracket	**A - 27-1**	Stopper Bracket
A - 4	Clamping Bolt	**A - 27-2**	Press Stopper Shaf
A - 5	Pressure-control Bolt	**A - 27-3**	Rubber Ring
A - 6	Pressure-control Spring Cover	**A - 27-4**	Clamming Ring
A - 7	Pressure-control Spring	**A - 27-5**	Clamping Bolt
A - 8	Detent Screw	**A - 27-6**	Clamping Bolt
A - 9	Slide Block of Upper Roller	**A - 27-7**	Clamping Bolt
A - 10	Right Roller Bracket	**A - 27-8**	Stopper
A - 11	Slide Lever	**A - 27-9**	Spring Clamping Bolt
A - 12	Oilless	**A - 27-10**	Spring
A - 13	Clamping Washer	**A - 28**	Lower Roller
A - 14	Wrench Bolt	**A - 29**	Upper Roller
A - 15	Tie Bar of Stepping Motor	**A - 30**	Front-guide Ring
A - 16	Bearing Cover	**A - 31**	Lever Shaft
A - 17	Clamping Bolt	**A - 32**	Guide Ring
A - 18	Feed-timing Gear(MXL30T)	**A - 33**	Knob Bolt of Guide Ring
A - 19	Detent Screw	**A - 34**	Round Screw
A - 20	Drive-timing Gear(MXL20T)	**A - 35**	Lever
A - 21	Detent Screw	**A - 36**	Detent Screw
A - 22	Timing Belt(MXL75)	**A - 37**	Lever
A - 23	Stepping Motor	**A - 38**	Left Roller Bracket
A - 24	Clamping Bolt		
A - 25	Ball Bearing		

TBC50 PARTS B:
DRAWING CUTTING MODULE

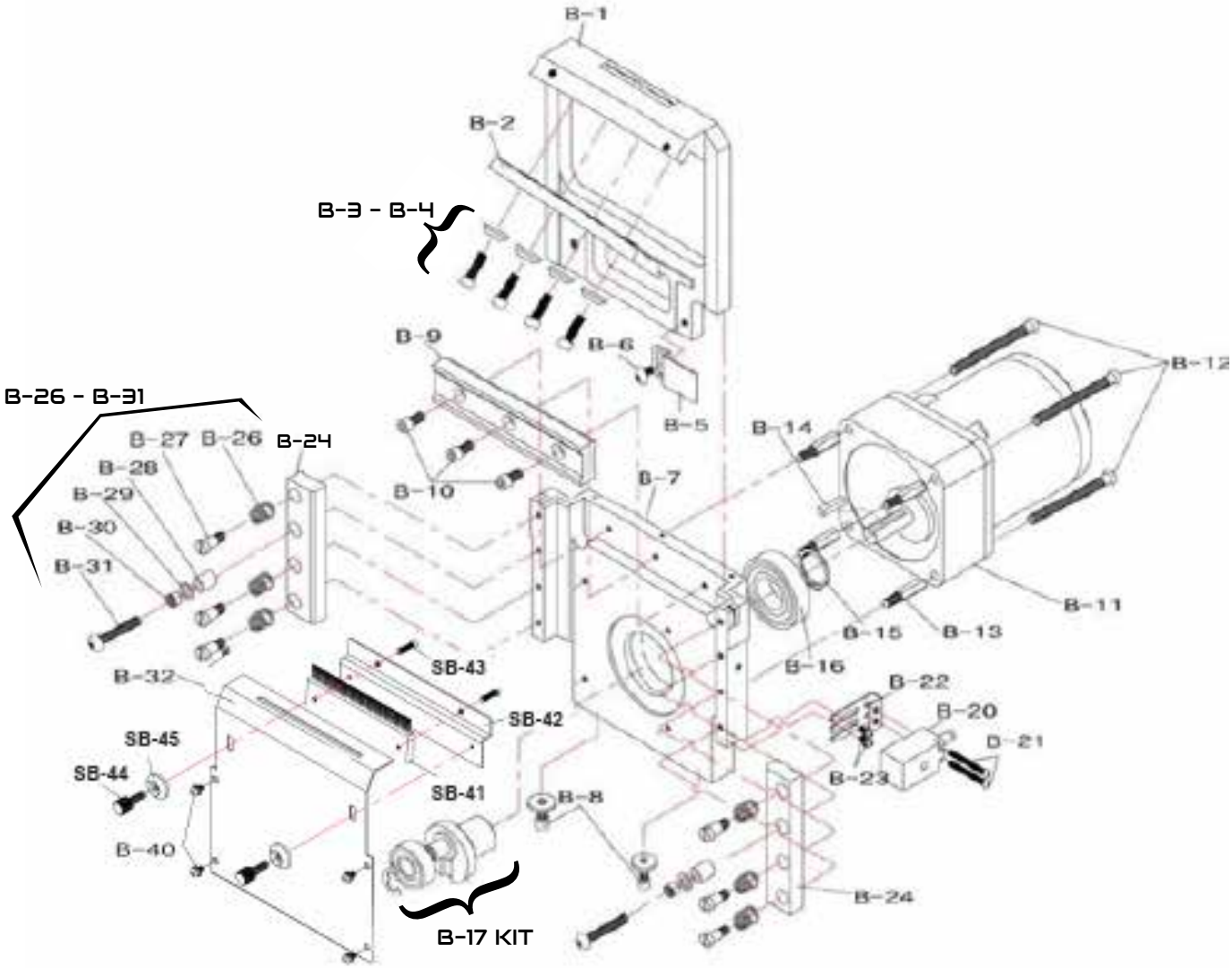

TBC50 PARTS B:
CUTTING MODULE

PART NO	DESCRIPTION	PART NO	DESCRIPTION 2
B -1	Upper Knife Case	**B -19**	E Ring
B -2	Upper Knife	**B -20**	Counting Sensor
B -3 – B -4	Wrench Bolt & Washer	**B -21**	Clamping Bolt
B -5	Counting-Senor Bracket	**B -22**	Clamping Bracket
B -6	Clamping Bolt	**B -23**	Clamping Bolt
B -7	Lower Knife Case	**B -24**	Right / Left Pressure Plate
B -8	Wrench Bolt	**B -26 – B -31**	Pressure Plate Hardware
B -9	Lower Knife	**B -32**	Front Cover
B -10	Wrench Bolt	**B -33**	Clamping Bolt (M3x6)
B -11	Motor + Reduction Gear	**B -34**	Roller Spacer
B -12	Clamping Bolt	**B -35**	Flat Bolt (M3x6)
B -13	Motor Supporter	**SB -41**	Anti-Static Brush
B -14	Motor Key	**SB -42**	Front Bracket
B -15	Snap Ring	**SB -43**	Clamping Bolt
B -16	Ball Bearing	**SB -44**	Height Control Bolt
B -17 KIT	Crank Bundle w/Hardware	**SB -45**	Height Control Nut
B -18	Ball Bearing		

TBC50 PARTS C:
DRAWING OTHER PARTS

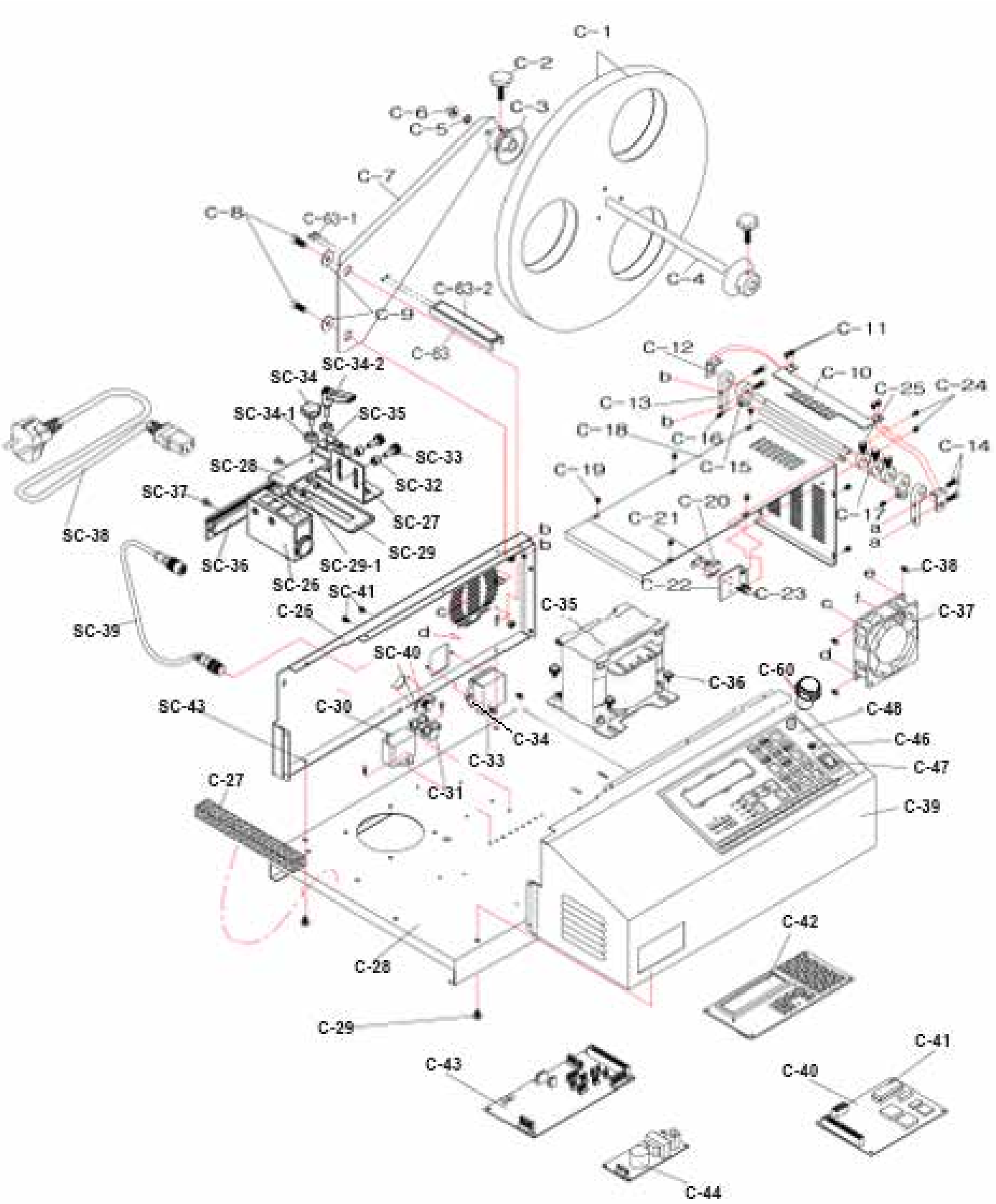

TBC50 PARTS C:

OTHER PARTS

PART NO	DESCRIPTION	PART NO	DESCRIPTION
C -1	Roll-Hanger Wheel	**C -38**	Round Bolt (M3x6L)
C -2	Clamping Bolt of Holder	**C -39**	Control Cover
C -3	Holder	**C -40**	Control Circuit Board(MB)
C -4	Roller-Hanger Shaft	**C -41**	ROM
C -5	Roller-Hanger Shaft Washer	**C -42**	Operation Circuit Board (DR)
C -6	Wrench Bolt (M6)	**C -37**	Cooling Fan
C -7	Roller Hanger	**C -44**	SMPS (Power Supply)
C -8	Flat Bolt (M6x16L)	**C -44-1**	Clamping Bolt (M3x5L)
C -9	Neck Washer of Roller-Hanger	**C -45**	Power Cord
C -10	Existence Detector	**C -46**	Toggle Switch
C -11	Clamping Bolt (M3x5L)	**C -47**	Power Switch
C -12	Clamping Bracket	**C -48**	Urethane Panel
C -13	Rear Guide-Pin Bracket-1	**C-60**	Emergency Switch
C -14	Wrench Bolt (M4x15L)	**C-60-1**	Emergency Switch Plate
C -15	Rear Tension-Guide Block	**C-61**	Rubber foot
C -16	Socket Set Screw (M4x6L)	**C-62**	Neck Washer/M4
C -17	Guide Ring	**C -63**	Roll-Hanger Tension Bar
C -18	Upper Guide Plate	**C -63-1**	Wrench Bolt (M5x12L)
C -19	Clamping Bolt (M3x5L)	**C -63-2**	Rubber Band
C -20	Micro Limit Switch	**SC -26**	Sensor
C -21	Plate-Nut	**SC -27**	Sensor Bracket
C -22	Limit Switch Bracket	**SC -28**	Angle Control Bracket
C -23	Round Bolt (M2x10L)	**SC -29**	Sensor Control Slide
C -24	Clamping Bolt (M3x5L)	**SC -29-1**	Trust Bolt (M4x6L)
C -25	Knob Bolt	**SC -32**	Liner
C -26	Left Cover	**SC -33**	Height-Control Bolt of Sensor
C -27	Sponge	**SC -34**	Position Control Bolt of Sensor
C -28	Base	**SC -34-1**	Neck Washer
C -29	Clamping Bolt (M4x8L)	**SC -34-2**	Clamp Knob Bolt
C -30	Condenser	**SC -35**	Plate-Nut of Sensor Guide
C -31	Terminal	**SC -36**	Sensor Guide
C -33	AC Connector (IN-PUT)	**SC -37**	Flat Head Bolt (M4x10L)
C -34	Clamping Bolts	**SC -38**	Power Cord
C -35	Transformer	**SC -39**	Sensor Connector
C -36	Clamping Bolts	**SC -40**	Sensor Connector Bracket
C -37	Cooling Fan	**SC -41**	Clamping Bolt (M3x5L)

WIRING DIAGRAM

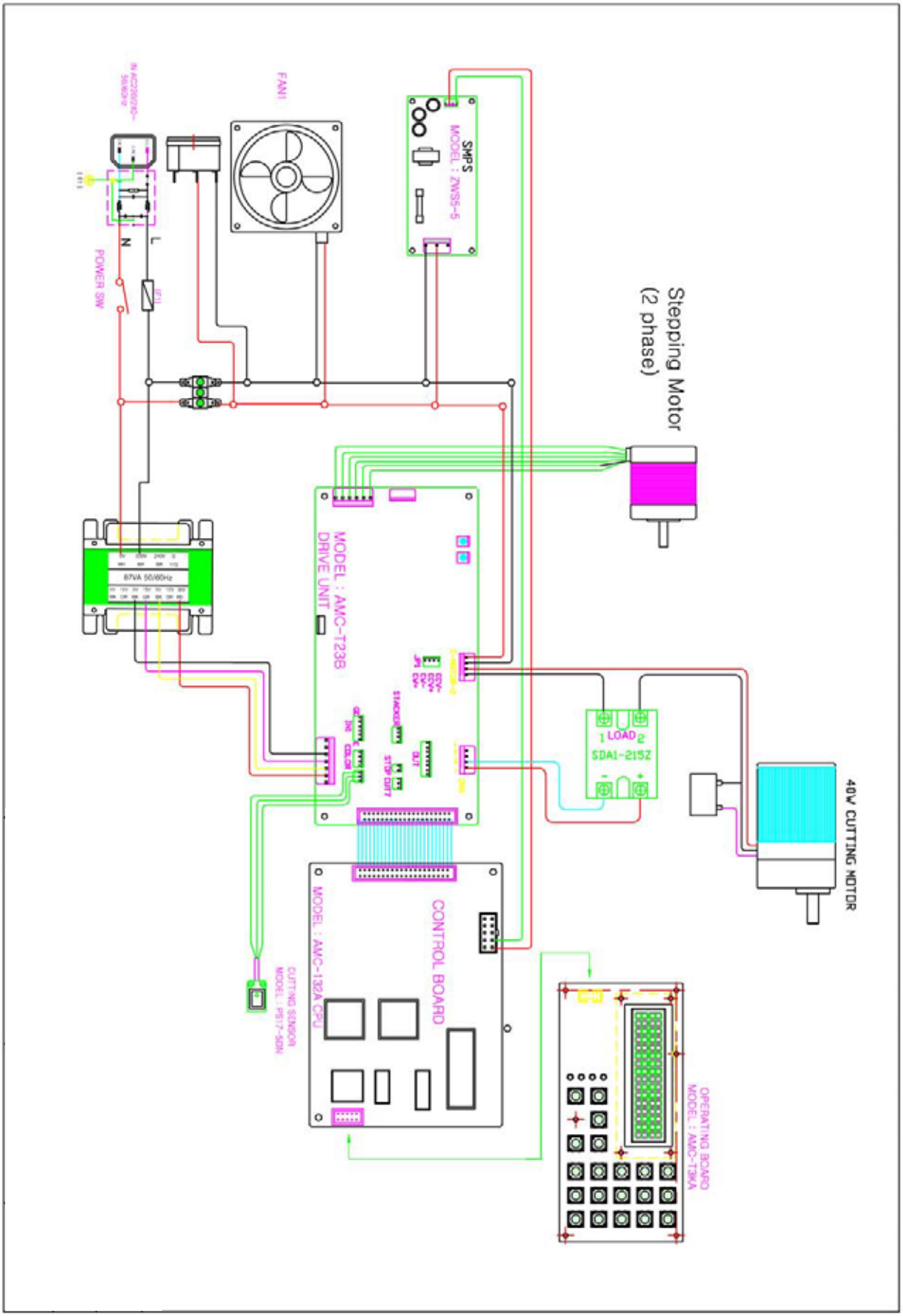

EU CONFORMITY DECLARATIONS

Scan the QR code or click on it to download the Declaration of Conformity

START International shall not be held liable for any unintentional errors, omissions, or inaccuracies contained within this instruction manual.

4270 Airborn Dr.
Addison TX, 75001

+1 972.248.1999

www.STARTinternational.com

Automatic and User Friendly



TBC50

COLD CUT

Heavy-Duty Non-Adhesive Material Cutter

- Automatically dispenses, measures and cuts non-adhesive materials
- Ideal for heavy production to cut tubing, sleeving, Nomex®, Velcro®, ribbon, etc.
- Cuts up to 4.3" (110 mm) wide material or multiple rolls
- High speed operation cuts up to 140 pieces per minute at 2" (50 mm) in length

Additional info for **TBC50**

- Easily programmed and operated - set length, quantity, and feed speed; then, press start
- Automatic shut-off feature stops power if material runs out during operation
- Adjustable pressure on feed roller for thin or smooth materials
- Stepper motor ensures accuracy
- HSS (high speed steel) cutting blade
- Safety guard protects operator from cutting mechanism
- No tooling required to cut different materials
- All 230V machines are CE Certified

TBC50H

HOT CUT

Heavy-Duty Non-Adhesive Material HOT Cutter

- Automatically dispenses, measures and cuts non-adhesive materials prone to fraying with a heat seal
- Ideal for heavy production to cut ribbon material, belting, webbing, sleeving, strapping, rope, etc.
- Cuts up to 3.54" (90mm) wide material or multiple rolls
- High speed operation cuts up to 140 pieces per minute at 2" (50mm) in length



Additional info for **TBC50H**

- Adjustable temperature control
- Easily programmed and operated - set length, quantity, and feed speed; then press start
- Automatic shut-off feature stops power if material runs out during operation
- Adjustable pressure on feed roller for thin or smooth materials
- Stepper motor ensures accuracy
- HSS (high speed steel) cutting blade
- Safety guard protects operator from cutting mechanism
- No tooling required to cut different materials
- All 230V machines are CE Certified



TBC50S

COLD CUT

Material Cutter with Photosensor Accuracy

- Cuts up to 4.33" (110mm) wide material or multiple rolls
- Cuts up to 140 pieces per minute at 2" (50mm) in length

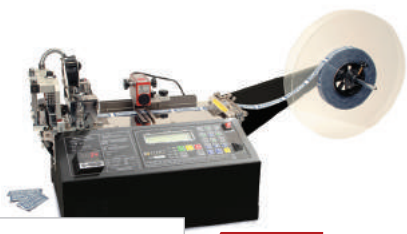

TBC50SH

HOT CUT

Material Cutter with Photosensor and Hot Knife

- Cuts up to 3.54" (90mm) wide material or multiple rolls
- Cuts up to 140 pieces per minute at 2" (50mm) in length

For 230V machines, please add "-2" to the end of the model number. (Example: TBC50-2)

MODEL #	Max. Width	Cut Length	Max. Material Thickness*	Feed Speed	Accuracy*	Max. Outside Dia. of Roll	Length and Count Settings	Feed and Cut	Dimensions	Weight
TBC50	4.33" (110mm)	.04 to 984' (1 to 300m)	0.25" (6mm)	105' (32m) / min. 21" (53cm) / sec.	±0.04" (1mm)	18" (457mm)	digital	automatic	38"(L) x 12.6"(W) x 18.9"(H) 965mm(L) x 320mm(W) x 380mm(H)	39 lbs (17.5 kg)
TBC50H	3.54" (90mm)	.60 to 984' (15 to 300m)	0.25" (6mm)	105' (32m) / min. 21" (53cm) / sec.	±0.04" (1mm)	18" (457mm)	digital	automatic	35.5"(L) x 14.6"(W) x 16"(H) 902mm(L) x 370mm(W) x 406mm(H)	47 lbs (21.3 kg)
TBC50S	4.33" (110mm)	.04" to 984' (1mm to 300m)	0.25" (6mm)	105' (32m) / min. 21" (53cm) / sec.	±0.04" (1mm)	18" (457mm)	digital	automatic	38"(L) x 12.6"(W) x 16"(H) 965mm(L) x 320mm(W) x 406mm(H)	39 lbs (17.5 kg)
TBC50SH	3.54" (90mm)	.60" to 984' (15mm to 300m)	0.25" (6mm)	105' (32m) / min. 21" (53cm) / sec.	±0.04" (1mm)	18" (457mm)	digital	automatic	32.3"(L) x 14.6"(W) x 16"(H) 820mm(L) x 370mm(W) x 406mm(H)	47 lbs (21.3 kg)

Electrical requirements: TBC50/TBC50H: 110V 50/60Hz (230V 50/60Hz CE), TBCFEEDER: 115 or 230V 50/60Hz CE, <2amps Switchable *Dependent on material being cut

NON-ADHESIVE Cutters

Heavy-Duty

Additional info for **Heavy-Duty cutters**

- Automatic shut-off feature stops power if material runs out during operation
- Easily programmed and operated - set length, quantity and feed speed; then press start
- Adjustable pressure on feed roller for thin or smooth materials
- Stepper motor ensures accuracy
- HSS (high speed steel) cutting blade
- Safety guard protects operator from cutting mechanism
- No tooling required to cut different materials
- All 230V machines are CE Certified



HOT CUT

Hot Cut machines are ideal for materials that fray when cut

Suggested accessory:
TBCFEEDER

See Pg. 25



For 230V machines, please add "-2" to the end of the model number. (Example: TBC50-SH-2)



TBC50S

COLD CUT

Material Cutter with Photosensor Accuracy

- Cuts up to 4.33" (100mm) wide material or multiple rolls
- Cuts up to 140 pieces per minute at 2" (50mm) in length



TBC52RT

COLD CUT

Material Cutter for Round & Straight Cutting

- Cuts up to 2.17" (55mm) wide material or multiple rolls
- Cuts up to 90 pieces per minute at 2" (50mm) in length

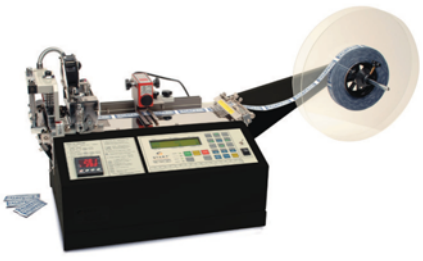

TBC50SH

HOT CUT

Material Cutter with Photosensor and Hot Knife

- Cuts up to 4.33" (100mm) wide material or multiple rolls
- Cuts up to 140 pieces per minute at 2" (50mm) in length



TBC52R

COLD CUT

Large Material Cutter for Round & Straight Cutting

- Cuts up to 2.17" (55mm) wide material or multiple rolls
- Cuts up to 90 pieces per minute at 2" (50mm) in length

» For details and technical specifications on these HEAVY-DUTY Material Cutters visit www.STARTinternational.com



TBC50HX

HOT CUT

Material ANGLED Cutter with HOT Knife

- Cuts up to 4.33" (100mm) wide material or multiple rolls
- Cuts up to 140 pieces per minute at 2" (50mm) in length



TBC55SK

COLD CUT

Label Cutter with Stacker

- Cuts up to 3.15" (80mm) wide material or multiple rolls
- Cuts up to 140 pieces per minute at 2" (50mm) long

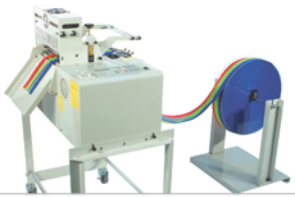

TBC50LH & TBC50LH/AIR

HOT CUT

Wide Material Cutters
TBC50LH (Electric)
TBC50LH/AIR (Pneumatic)

- Cuts up to 7.87" (200mm) wide material or multiple rolls
- Cuts up to 26 pieces per minute at 39.3" (1 meter) long



TBC553L & TBC552L

COLD CUT

Extra Large Cutter

- Cuts up to 8.25" (210mm) wide material or multiple rolls
- Cut up to 105 ft (32m) per min., 21" (43cm) per sec

Please refer to our website for the latest products and specifications. Specifications are subject to change without notice.
info@startinternational.com ▪ www.STARTinternational.com