START International

We Are Dispensers

Barcodes
Promotional Labels
pharmaceutical
ELECTRONICS
APPLIANCE
Safety Seal
AUTOMOTIVE
Label Dispensers
MANUFACTURING
VHB Application
PACKAGING
Die-Cut Gaskets
Non-Adhesive Cutters
Product ID
SOLAR & WIND POWER
Battery Manufacturing
Wire Harnessing
Heat Shrink Tubing
Parts Assembly
FOOD & BEVERAGE
RFID
MEDICAL
Tape Dispensers

LDX8000 Series

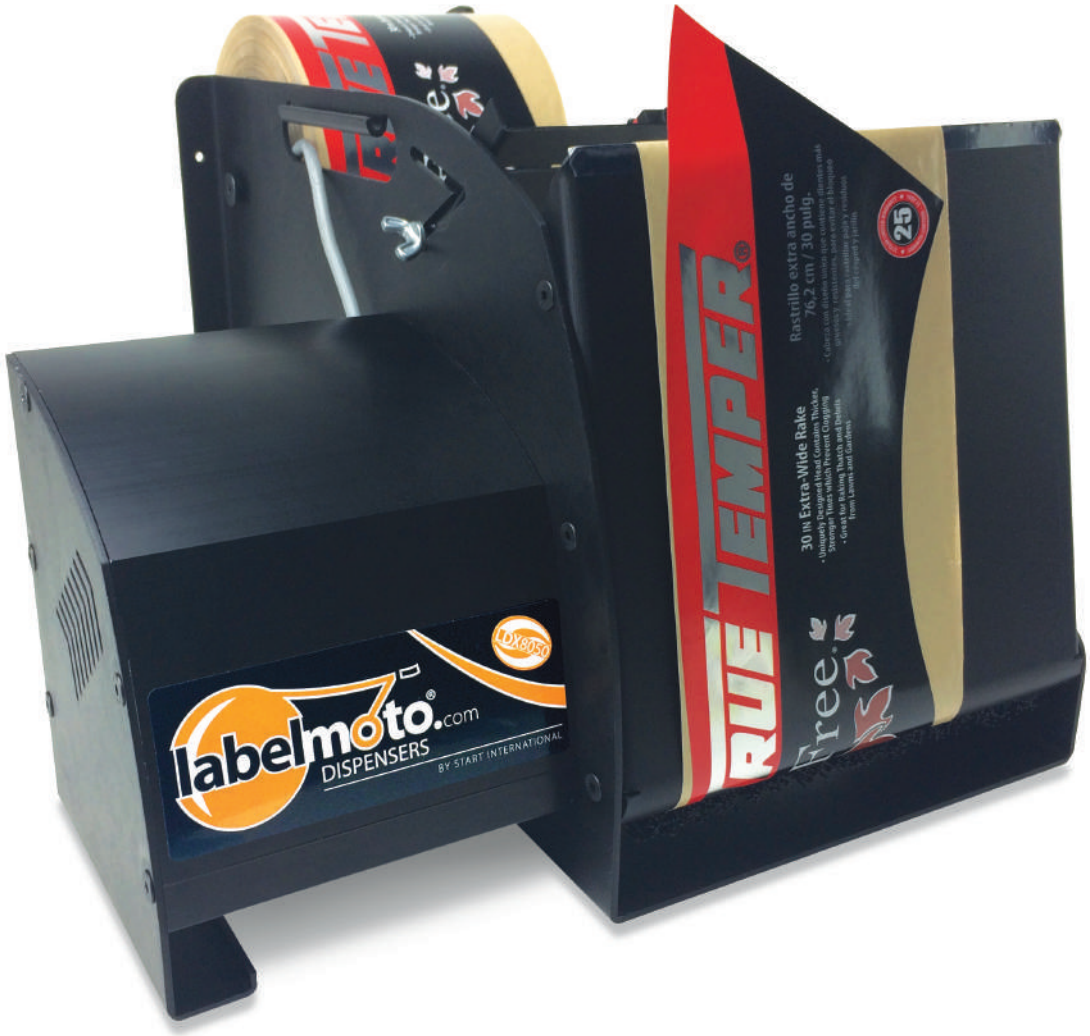

LDX8025 LDX8050 LDX8100

THE LABEL DISPENSER
BY START INTERNATIONAL

labelmoto

START International
4270 Airborn Drive, Addison, TX 75001, U.S.A.
Tel 1.972.248.1999 • Fax 1.972.248.1991 • service@STARTinternational.com
www.STARTinternational.com

START International We Are Dispensers

CONTENTS

Read this user's manual before use to ensure proper operation. Keep the manual on hand for reference in case there is a problem.

Warranty Information	Page 2
Maintenance	Page 3
Exploded View	Page 3
Features	Page 4
Notes	Page 4
Repair Policy	Page 4
Specifications	Page 4
Set-up & Operation	Page 5
Safety	Page 6
Photosensor Adjustments	Page 7

WARRANTY POLICY FOR LD SERIES LABEL DISPENSERS

START International warrants all parts on LDX8000 series label dispensers against defects in design, materials and workmanship for a period of 1080 days. Labor to replace defective parts will be performed at no charge for the first 360 days after date of purchase. Warranty does not cover transportation costs.

Our sole obligation under this warranty is limited to repair, replacement or credit of the purchase price, at our option, for the machines listed above, which do not perform properly the function for which they were designed.

Warranty repair is contingent upon our examination and determination that alleged defects have not been caused by misuse, abuse, improper installation or application, repair, alteration, accident or neglect in use, storage, transportation or handling.

The above warranty and remedy constitutes START International's sole liability hereunder and are in lieu and exclusive of all other warranties and remedies expressed, implied, or statutory, including, but not limited to, those of merchantability and fitness for a particular purpose.

We Are Dispensers

MAINTENANCE

Turn machine off when not in use. Remove liner material from take-up hub at approximately 3” in diameter or if motor appears to be straining. Do not operate machine without covers in place. Do not operate if inspection reveals a damaged power or sensor cord.

EXPLODED VIEW

ITEM NO.	PART NUMBER	DESCRIPTION	QTY.
1	PRT-041-03	STRIP PLATE	1
2	PRT-040-03	SUPPORT	1
3	PRT-038-01	END CAP	1
4	PRT-037-03	MAIN PLATE	1
5	PRT-035-01	REEL SUPPORT	1
6	PRT-031-01	ADAPTER, BRUSH HOLDER	1
7	PRT-023-01	HUB LOCK	2
8	PRT-022-08	SHAFT, BUMPED GUIDE ROD	1
9	PRT-020.2-03	LOCK ROD	1
10	PRT-018.1-01	PHOTO SENSOR BRACKET	1
11	PRT-016.1-10	ROLLER, ONE INCH	1
12	PRT-015-03	TAKE-UP HUB ROLLER, 1.500"	1
13	PRT-011-01	MOTOR COVER	1
14	PRT-005-01	HUB LOCK, LARGE	1
15	OTS-055-02	INTERNAL TOOTH LOCK WASHER #10	4
16	OTS-055-01	EXTERNAL TOOTH LOCK WASHER #10	2
17	OTS-054-01	10/32 SHOULDER SCREW #6731208Z	2
18	OTS-040-01	RUBBER FEET	6
19	OTS-015-03	SET SCREW, #10-32 X 3/8, BLACK	2
20	OTS-012-01	SPOOL, THREE INCH	2
21	OTS-011-03	WING SCREW, #5/16-18	2
22	OTS-011-02	BHCS, #5/16-18X3/4	1
23	OTS-010-01	HEX NUT, #10-32	2
24	OTS-007-01	THUMBSCREW, #4-40X.75L	2
25	OTS-005-01	WING SCREW, #10-32	2
26	OTS-004-01	FHCS, #10-32X.50L	16
27	OTS-003-03	BHCS #10-32X.375	3
28	OTS-003-02	BHCS, #10-32X.500L	1
29	OTS-003-01	BHCS, #10-32X1.00L	10
30	ELE-049-01	4 PORT PUSH-IN WIRE CONNECTOR	1
31	ELE-048-01	3 PORT PUSH-IN WIRE CONNECTOR	1
32	ELE-044-01	POWER CORD, IEC, TYPE B	1
33	ELE-034-01	SOLID STATE RELAY	1
34	ELE-033-01	PHOTOSENSOR	1
35	ELE-030-03	115v-50 RPM AC MOTOR	1
36	ELE-002-03	CONN ADAPTER DOUBLE TAB .250 (726308-1ND)	1
37	ASM-012-01	ASSY, POWER / SWITCH	1
	PRT-058-01	AC WIRING PLATE	1
	ELE-032-01	POWER SWITCH	1
	ELE-035-01	POWER INLET	1
38	ASM-006-07	ASSY, BRUSH	1
	PRT-030-07	BRUSH HOLDER	1
		BRUSH	
39	ASM-005-02	EXTRA GROUND WIRE	1
40	ASM-005-01	WIRE HARNESS	1

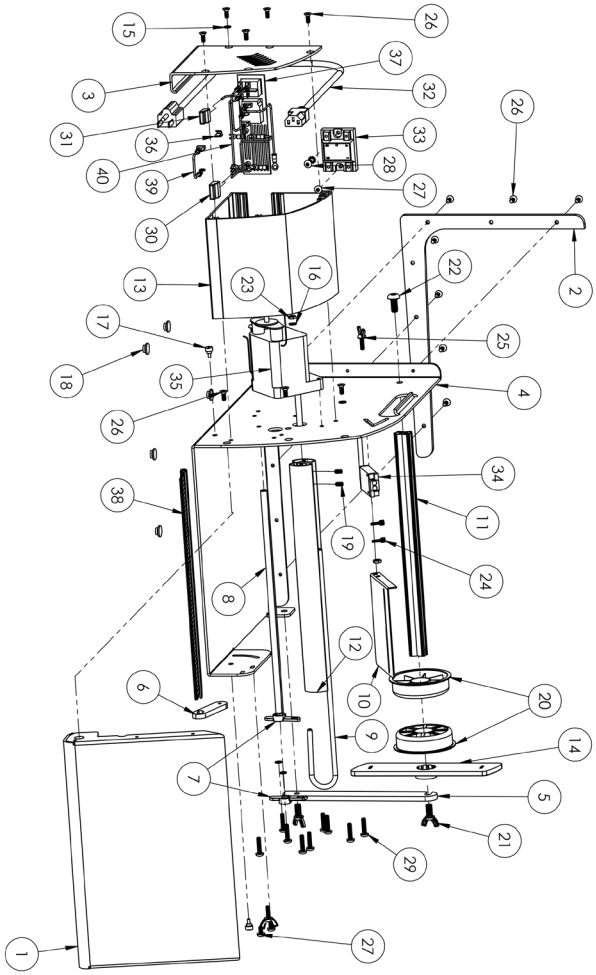

ASSY LDXL8050 SHOWN

START International
4270 Airborn Drive, Addison, TX 75001, U.S.A.
Tel 1.972.248.1999 • Fax 1.972.248.1991 • service@STARTinternational.com
www.STARTinternational.com

START International We Are Dispensers

FEATURES

- Will dispense butt-cut and die-cut material.
- Adjustable photosensor for pinpoint accuracy.
- Handled lock rod makes scrap removal easy.
- No tools required for adjustment.
- Hanging capability with optional LDHANGER. (Needs to be secured properly)

NOTES

- Keep strip plate free of adhesive build-up.
- Clean photosensor with compressed air or dry cloth.
- Do not drop the dispenser or subject it to heavy shock.
- Turn off machine when not in use.

REPAIR POLICY

Contact START International to determine the nature of the problem.
Supply START with the following information:
1. Who the unit was purchased from.
2. Model number and serial number.
3. If available, date purchased and copy of invoice or packing slip.

START will issue a RMA (Return Merchandise Authorization) for repair.
Return machine to START, insured and prepaid.
START will notify the customer if there is a repair charge.

SPECIFICATIONS:

Model#	LDX8025	LDX8050	LDX8100
Liner Capacity Width	.25” to 8” (3mm to 203mm)	.25” to 8” (3mm to 203mm)	.25” to 8” (3mm to 203mm)
Label Length	.125” to 12” (3mm to 305mm)	.50” to 12” (3mm to 305mm)	.50” to 12” (3mm to 305mm)
Roll Capacity	12” (305mm)	12” (305mm)	12” (305mm)
Feed Speed*	2”/sec (5.1cm/sec)	3.9”/sec (10cm/sec)	7.8”/sec (19.8cm/sec)
Dimensions Inches	14.4 (L) x 14.9 (W) x 10.4 (H)	14.4 (L) x 14.9 (W) x 10.4 (H)	14.4 (L) x 14.9 (W) x 10.4 (H)
Centimeters	36.6 (L) x 37.8 (W) x 27.7 (H)	36.6 (L) x 37.8 (W) x 27.7 (H)	36.6 (L) x 37.8 (W) x 27.7 (H)
Weight	7.75 lbs (3.5kg)	9.55 lbs (4.3kg)	9.55 lbs (4.3kg)
Electrical Requirements	100/115V AC 0.75A 60Hz, 220-240V AC 1.8A 50Hz CE available)	100/115V AC 0.75A 60Hz, 220-240V AC 1.8A 50/60Hz CE available)	100/115V AC 0.75A 60Hz, 220-240V AC 1.8A 50/60Hz CE available)

START International
4270 Airborn Drive, Addison, TX 75001, U.S.A.
Tel 1.972.248.1999 • Fax 1.972.248.1991 • service@STARTinternational.com
www.STARTinternational.com

START International

We Are Dispensers

SET-UP INSTRUCTIONS

***Machine must be unplugged from power supply for Steps 1 to 7.**

1

Load Label Roll

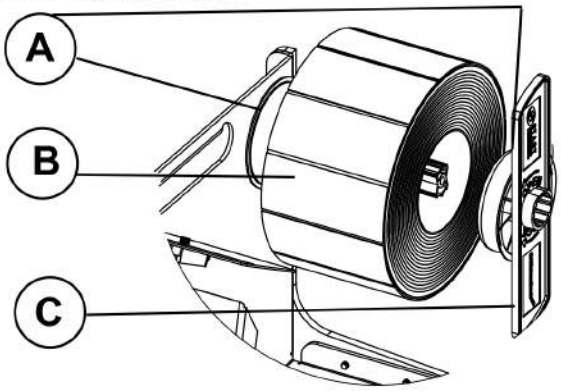

A: Insert core holders (2) into each side of your label roll
B: Slide label roll onto reel hanger bar
C: Rotate the large hub lock **Gently** clockwise until it locks into place

2

Feed Labels

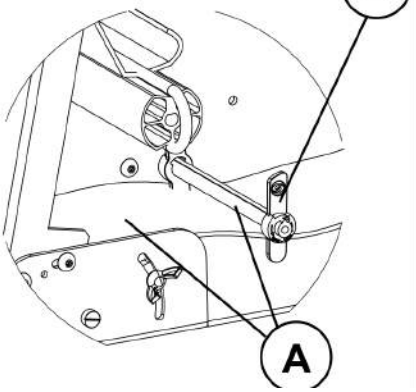

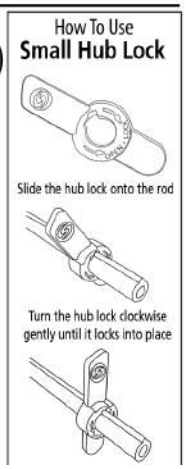

3

Feed Label Liner over Strip Plate

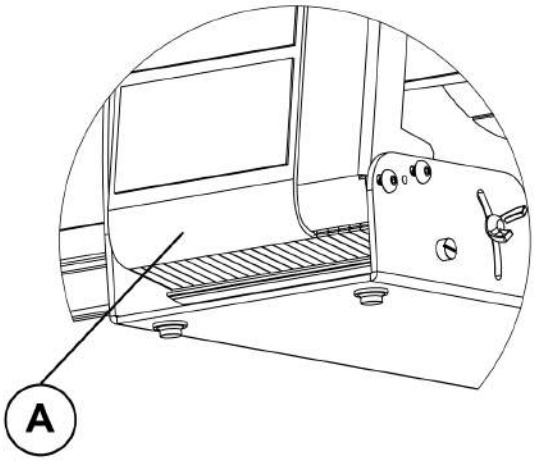

A: Feed label liner between brush and strip plate

4

Separate Liner over Top of Strip Plate

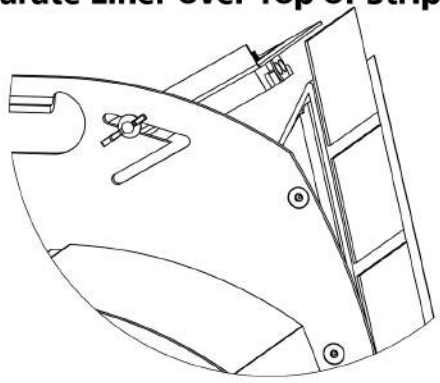

A: Feed label liner over strip plate separating the liner from the label

START International
4270 Airborn Drive, Addison, TX 75001, U.S.A.
Tel 1.972.248.1999 • Fax 1.972.248.1991 • service@STARTinternational.com
www.STARTinternational.com

START International

We Are Dispensers

SET-UP INSTRUCTIONS

5

Remove lock rod and Secure liner

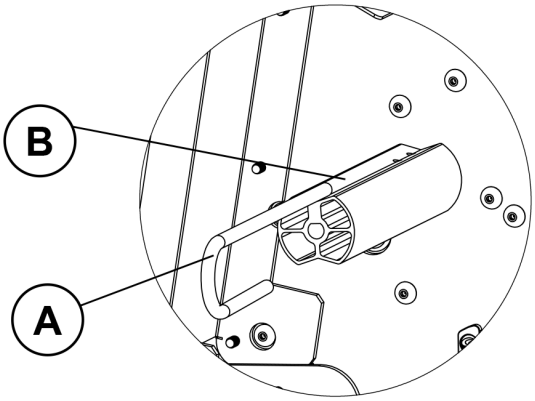

A: Slide lock rod off of take-up hub
B: Secure label liner onto take-up hub and
C: Slide lock rod back on to take-up hub with 2-3" (50-75mm) of liner beyond the lock rod.

6

Adjust Brush Pressure

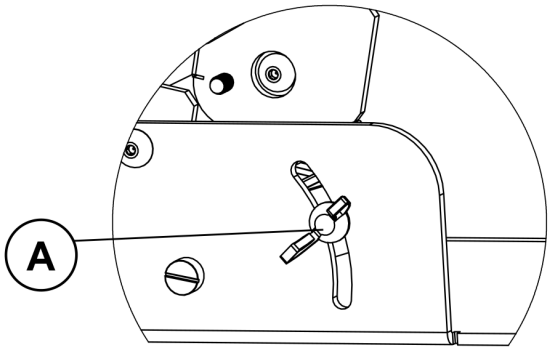

A: To apply the proper amount of tension for proper label feeding and detection; loosen brush wing screw and press down to increase tension, then tighten screw.

7

Adjust Label Sensor

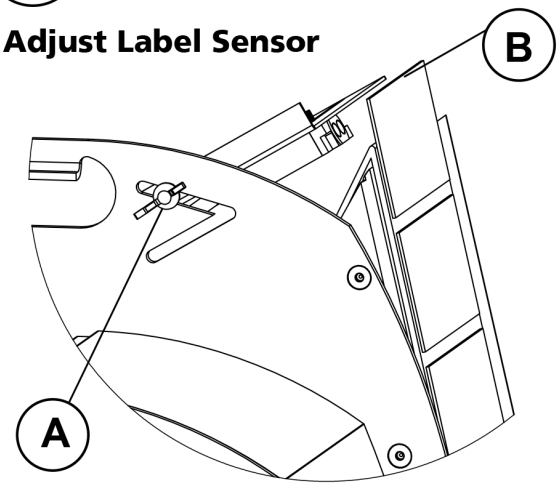

A: Loosen wing screw, then adjust sensor plate.
B: Point sensor towards the top edge of the label.
C: Tighten wing screw to secure sensor in place.

8

Plug In & Turn On

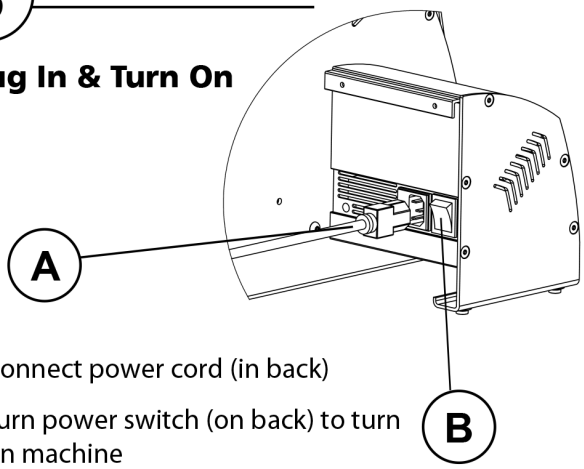

A: Connect power cord (in back)
B: Turn power switch (on back) to turn on machine

Now you're ready to roll.

START International
4270 Airborn Drive, Addison, TX 75001, U.S.A.
Tel 1.972.248.1999 • Fax 1.972.248.1991 • service@STARTinternational.com
www.STARTinternational.com

ADJUSTMENTS

Hold Down:

Using the upper thumbscrew on the side of the machine, adjust the hold down for tensioning. For best results, labels should be pressed firmly against the strip plate. However, if the labels are held too tightly, they will cause excessive drag on the motor.

Photosensor:

The photosensor can be adjusted in any direction by using the lower thumbscrew on the side of the machine and the thumbscrew underneath the photosensor bracket. Loosening the thumbscrew on the side of the machine allows the photosensor to move in and out. This is used to set the overhang distance of the label over the strip plate. The thumbscrew underneath the photosensor bracket is used to swivel the sensor along the front of the strip plate. When the label is being fed the correct distance, lock the bracket in place. If there are 2 or more labels across, align the photosensor with the last label to be removed. When these screws are locked in place, the machine is set.

