START International

We Are Dispensers

Barcodes
Promotional Labels
ELECTRONICS
pharmaceutical
Safety Seal
AUTOMOTIVE
APPLIANCE
Label Dispensers
MANUFACTURING
VHB Application
PACKAGING
Die-Cut Gaskets
Non-Adhesive Cutters
Product ID
SOLAR & WIND POWER
Battery Manufacturing
Wire Harnessing
Heat Shrink Tubing
Parts Assembly
FOOD & BEVERAGE
RFID
MEDICAL
Tape Dispensers

LDX6000 Series



LDX6025 LDX6050 LDX6100

THE LABEL DISPENSER
BY START INTERNATIONAL

labelmoto

START International
4270 Airborn Drive, Addison, TX 75001, U.S.A.
Tel 1.972.248.1999 • Fax 1.972.248.1991 • service@STARTinternational.com
www.STARTinternational.com

START International We Are Dispensers

CONTENTS

Read this user's manual before use to ensure proper operation. Keep the manual on hand for reference in case there is a problem.

Warranty Information	Page 2
Maintenance	Page 3
Exploded View	Page 3
Features	Page 4
Notes	Page 4
Repair Policy	Page 4
Specifications	Page 4
Set-up & Operation	Page 5
Safety	Page 6
Photosensor Adjustments	Page 7

WARRANTY POLICY FOR LD SERIES LABEL DISPENSERS

START International warrants all parts on LDX6000 series label dispensers against defects in design, materials and workmanship for a period of 1080 days. Labor to replace defective parts will be performed at no charge for the first 360 days after date of purchase. Warranty does not cover transportation costs.

Our sole obligation under this warranty is limited to repair, replacement or credit of the purchase price, at our option, for the machines listed above, which do not perform properly the function for which they were designed.

Warranty repair is contingent upon our examination and determination that alleged defects have not been caused by misuse, abuse, improper installation or application, repair, alteration, accident or neglect in use, storage, transportation or handling.

The above warranty and remedy constitutes START International's sole liability hereunder and are in lieu and exclusive of all other warranties and remedies expressed, implied, or statutory, including, but not limited to, those of merchantability and fitness for a particular purpose.

MAINTENANCE

Turn machine off when not in use. Remove liner material from take-up hub at approximately 3” in diameter or if motor appears to be straining. Do not operate machine without covers in place. Do not operate if inspection reveals a damaged power or sensor cord.

EXPLODED VIEW

ITEM NO.	PART NUMBER	DESCRIPTION	QTY.
1	PRT-059-01	PHOTO SENSOR NUT PLATE	1
2	PRT-024-01	OUTRIGGER	1
3	PRT-023-01	HUB LOCK	1
4	PRT-022-04	SHAFT, BUMPED GUIDE ROD	1
5	PRT-020.1-06	LOCK ROD	1
6	PRT-019-01	REEL HOLDER ARM	1
7	PRT-018.1-01	PHOTO SENSOR BRACKET	1
8	PRT-017.1-03	TAKE-UP HUB ROLLER, 1.250”	1
9	PRT-016.1-06	ROLLER, ONE INCH	1
10	PRT-014-01	MAIN PLATE	1
11	PRT-013-01	END CAP	1
12	PRT-011-01	MOTOR COVER	1
13	PRT-005-01	HUB LOCK, LARGE	1
14	PRT-003-02	STRIP PLATE	1
15	OTS-055-02	INTERNAL TOOTH LOCK WASHER #10	3
16	OTS-055-01	EXTERNAL TOOTH LOCK WASHER #10	2
17	OTS-051-01	NYLON CABLE TIE	3
18	OTS-050-01	BLACK CABLE TIE MOUNT	1
19	OTS-040-01	RUBBER FEET	4
20	OTS-028-01	WASHER FOR SENSOR BRACKET & BRUSH HOLDER	1
21	OTS-022-01	HEX KEY, 3/16”	1
22	OTS-020-02	FHCS, #8/32x1/4”	3
23	OTS-015-01	SET SCREW, #8-32X.25, BLACK	1
24	OTS-012-01	SPOOL, THREE INCH	2
25	OTS-011-01	FHCS, #5/16-18X.750L	2
26	OTS-010-01	HEX NUT, #10-32	1
27	OTS-007-01	THUMBSCREW, #4-40X.75L	1
28	OTS-005-01	WING SCREW, #10-32	2
29	OTS-004-01	FHCS, #10-32X.50L	5
30	OTS-003-03	BHCS #10-32X.375L	2
31	OTS-003-02	BHCS, #10-32X.500L	1
32	OTS-003-01	BHCS, #10-32X1.00L	7
33	OTS-002-01	FHCS, #10-32X1.00L	5
34	ELE-049-01	4 PORT PUSH-IN WIRE CONNECTOR	1
35	ELE-048-01	3 PORT PUSH-IN WIRE CONNECTOR	1
36	ELE-044-01	POWER CORD, IEC, TYPE B	1
37	ELE-034-01	SOLID STATE RELAY	1
38	ELE-033-01	PHOTOSENSOR	1
39	ELE-030-03	115v-50 RPM AC MOTOR	1
40	ELE-002-03	CONN ADAPTER DOUBLE TAB .250 (726308-IND)	1
41	ASM-012-01	ASSY, POWER / SWITCH	1
	PRT-058-01	AC WIRING PLATE	1
	ELE-032-01	POWER SWITCH	1
	ELE-035-01	POWER INLET	1
42	ASM-006-03	BRUSH ASSY	1
	PRT-030-03	BRUSH HOLDER	1
	PRT-036-03	BRUSH	1
43	ASM-005-02	EXTRA GROUND WIRE	1
44	ASM-005-01	WIRE HARNESS	1

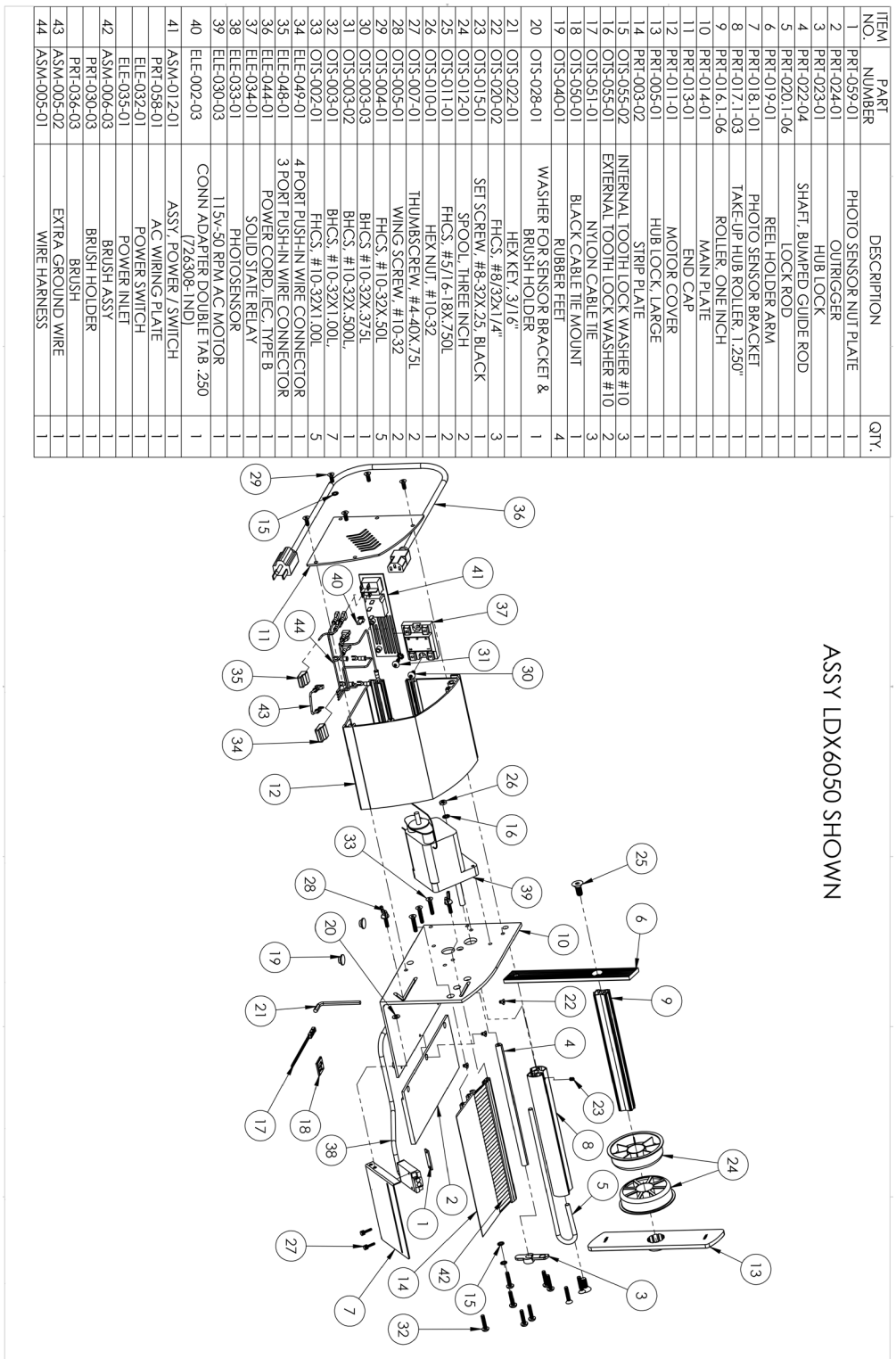

ASSY LDX6050 SHOWN

4270 Airborn Drive, Addison, TX 75001, U.S.A.
Tel 1.972.248.1999 • Fax 1.972.248.1991 • service@STARTinternational.com
www.STARTinternational.com

START International We Are Dispensers

FEATURES

- Will dispense butt-cut and die-cut material.
- Adjustable photosensor for pinpoint accuracy.
- Handled lock rod makes scrap removal easy.
- No tools required for adjustment.
- Hanging capability with optional LDHANGER. (Needs to be secured properly)

NOTES

- Keep strip plate free of adhesive build-up.
- Clean photosensor with compressed air or dry cloth.
- Do not drop the dispenser or subject it to heavy shock.
- Turn off machine when not in use.

REPAIR POLICY

Contact START International to determine the nature of the problem.
Supply START with the following information:
1. Who the unit was purchased from.
2. Model number and serial number.
3. If available, date purchased and copy of invoice or packing slip.

START will issue a RMA (Return Merchandise Authorization) for repair.
Return machine to START, insured and prepaid.
START will notify the customer if there is a repair charge.

SPECIFICATIONS:

Model#	LDX6025	LDX6050	LDX6100
Liner Capacity Width	.25” to 7” (6mm to 114mm)	.25” to 7” (6mm to 178mm)	.25” to 7” (6mm to 178mm)
Label Length	.125” to 6” (3mm to 152mm)	.50” to 6” (13mm to 152mm)	.50” to 6” (13mm to 152mm)
Roll Capacity	12” (31cm)	12” (31cm)	12” (31cm)
Feed Speed*	1.6”/sec (3.9cm/sec)	3.3”/sec (8cm/sec)	6.6”/sec (16.8cm/sec)
Dimensions Inches	10.6 (L) x 13.6 (W) x 14.5 (H)	10.6 (L) x 13.6 (W) x 14.5 (H)	10.6 (L) x 13.6 (W) x 14.5 (H)
Centimeters	27.4 (L) x 34.5 (W) x 36.8 (H)	27.4 (L) x 34.5 (W) x 36.8 (H)	27.4 (L) x 34.5 (W) x 36.8 (H)
Weight	7.8 lbs (3.5kg)	9.6 lbs (4.4kg)	9.6 lbs (4.4kg)
Electrical Requirements	100/115V AC 0.75A 60Hz, 220-240V AC 1.8A 50Hz CE available)	100/115V AC 0.75A 60Hz, 220-240V AC 1.8A 50/60Hz CE available)	100/115V AC 0.75A 60Hz, 220-240V AC 1.8A 50/60Hz CE available)

START International
4270 Airborn Drive, Addison, TX 75001, U.S.A.
Tel 1.972.248.1999 • Fax 1.972.248.1991 • service@STARTinternational.com
www.STARTinternational.com

START International

We Are Dispensers

SET-UP INSTRUCTIONS

ITEMS INCLUDED

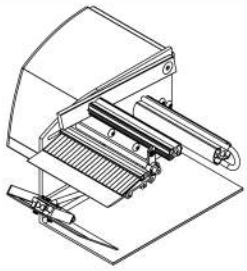



Hex Wrench

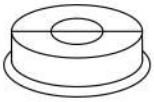

Core Holders (2)

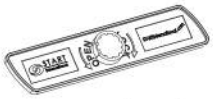

Large Hub Lock



Small Hub Lock

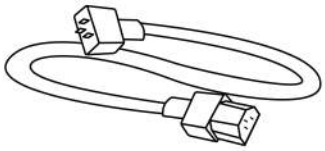

Power Cord

1

Lift Reel Holder Arm

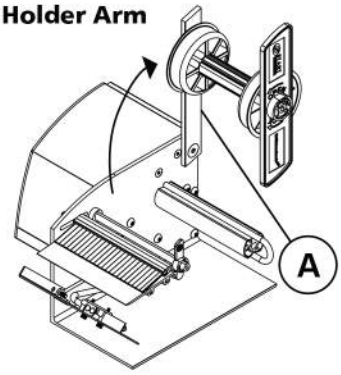

A: Lift reel holder arm slightly past 90° angle and lock into position using provided hex wrench

2

Load Label Roll

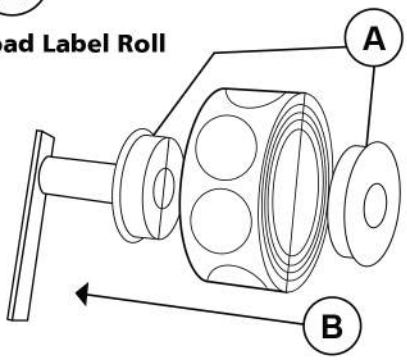

A: Insert core holders (2) into each side of your label roll

SET-UP INSTRUCTIONS

B: Slide loaded roll into reel hanger bar

3

Material Guide

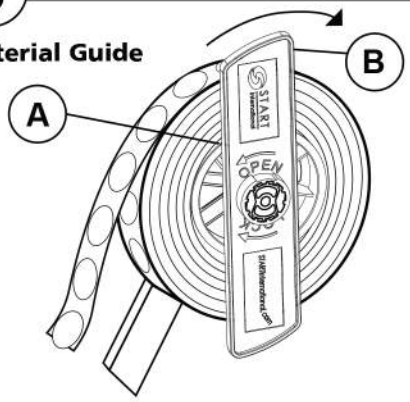

A: Slide large hub lock into reel hanger bar to secure label roll

B: Rotate the large hub lock **lightly** clockwise until it locks into place

4

Remove Lock Rod

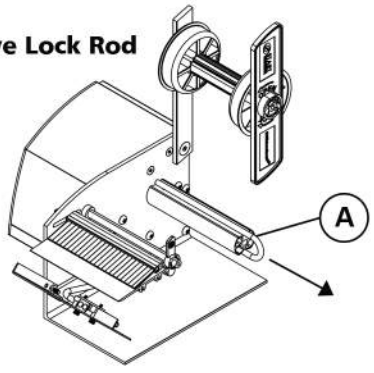

A: Slide lock rod off take-up hub

START International
4270 Airborn Drive, Addison, TX 75001, U.S.A.
Tel 1.972.248.1999 • Fax 1.972.248.1991 • service@STARTinternational.com
www.STARTinternational.com

START International

We Are Dispensers

SET-UP INSTRUCTIONS

5 Load Dispenser

A: Feed label liner **under** guide rod and brush

B: Bend liner **around** strip plate and take-up hub (label will hang slightly over edge for lifting)

C: Slide lock rod back into take-up hub to secure liner

D: Slide small hub lock into guide rod and rotate clockwise **lightly** until it locks into place

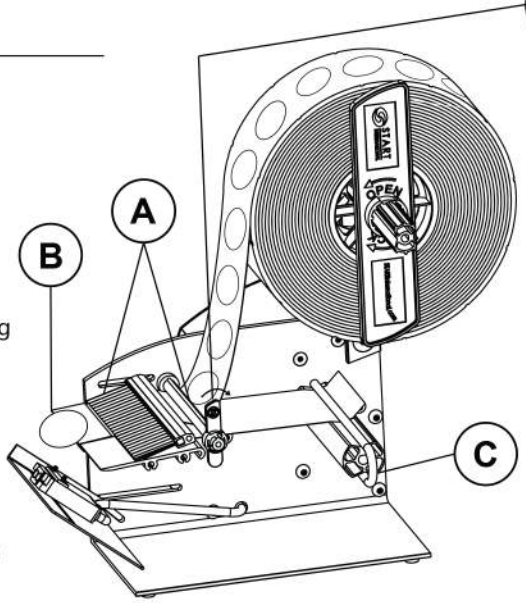

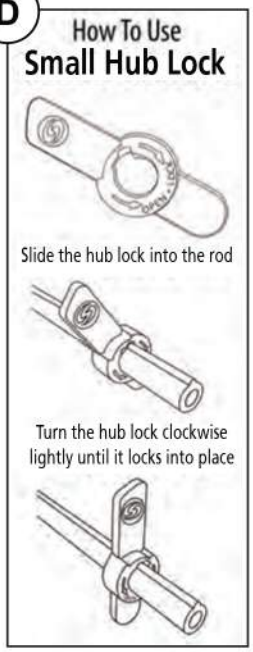

6 Adjust Sensor

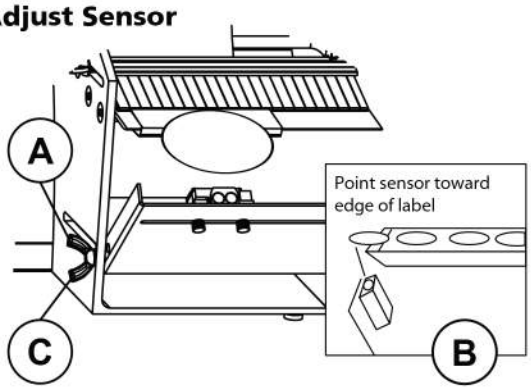

A: Loosen wingscrew to adjust sensor plate

B: Point sensor towards front edge of label

C: Tighten wingscrew to secure sensor plate in place

7 Plug In & Turn On

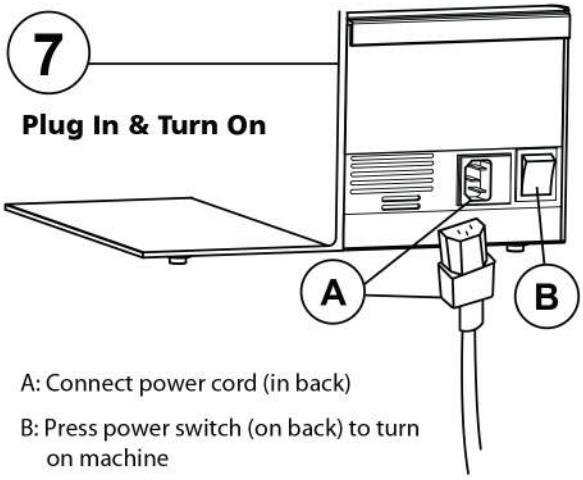

A: Connect power cord (in back)

B: Press power switch (on back) to turn on machine

Now you're ready to roll.

SAFETY



Turn power OFF while loading and unloading.

Do NOT stick finger in lock rod while machine is powered on.

Beware of loose or dangling objects (i.e. lanyard, bracelet, hair) while machine is powered on.

4270 Airborn Drive, Addison, TX 75001, U.S.A.
Tel 1.972.248.1999 • Fax 1.972.248.1991 • service@STARTinternational.com
www.STARTinternational.com

ADJUSTMENTS

Hold Down:

Using the upper thumbscrew on the side of the machine, adjust the hold down for tensioning. For best results, labels should be pressed firmly against the strip plate. However, if the labels are held too tightly, they will cause excessive drag on the motor.

Photosensor:

The photosensor can be adjusted in any direction by using the lower thumbscrew on the side of the machine and the thumbscrew underneath the photosensor bracket. Loosening the thumbscrew on the side of the machine allows the photosensor to move in and out. This is used to set the overhang distance of the label over the strip plate. The thumbscrew underneath the photosensor bracket is used to swivel the sensor along the front of the strip plate. When the label is being fed the correct distance, lock the bracket in place. If there are 2 or more labels across, align the photosensor with the last label to be removed. When these screws are locked in place, the machine is set.

